PROPRIETARY AND CONFIDENTIAL
THE INFORMATION CONTAINED IN THIS DRAWING IS THE SOLE PROPERTY OF S&B FILTERS, INC. ANY REPRODUCTION IN PART OR AS A WHOLE WITHOUT THE WRITTEN PERMISSION OF S&B FILTERS, INC. IS PROHIBITED.

REVISIONS			
REV.	DESCRIPTION	DATE	APPROVED
A	INITIAL RELEASE	02/27/2024	A. CRUZ
B	ADDED EXTRUDED STRAP COVER	09/04/2024	A.CRUZ
C	REPLACE PN	10/17/2025	A. CRUZ

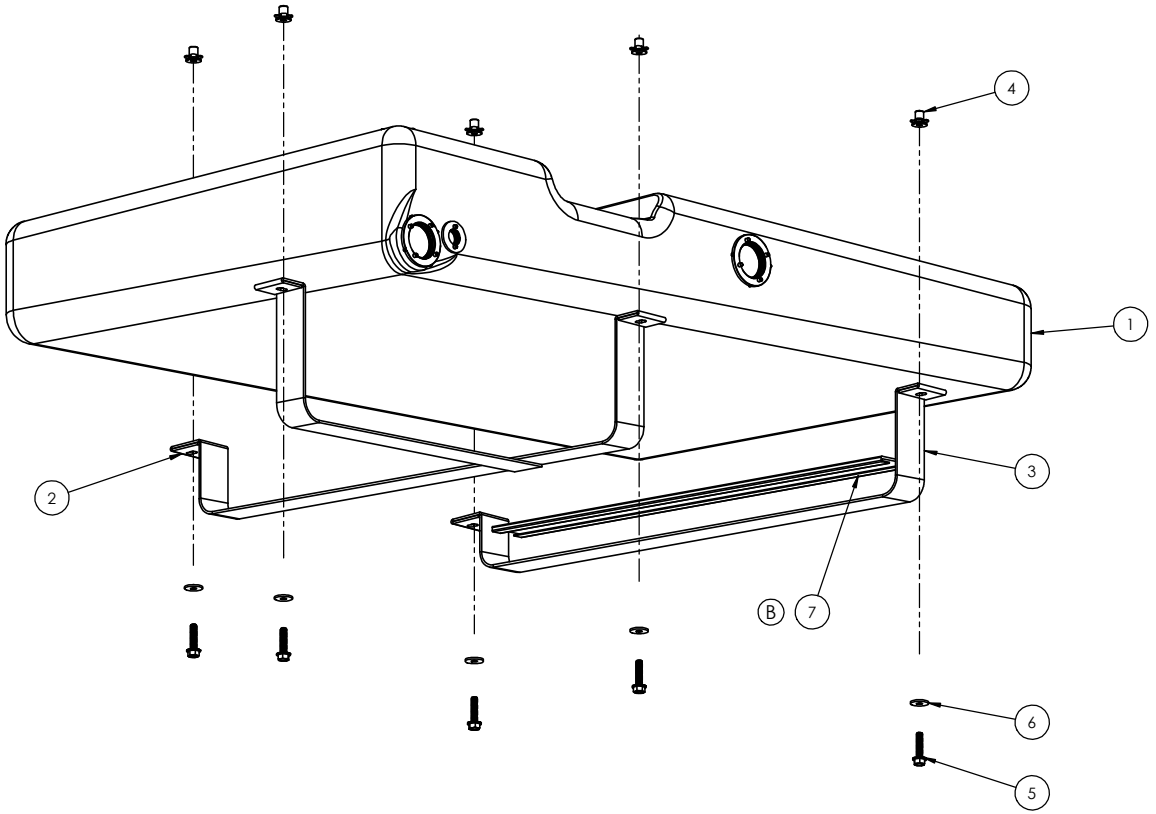

ITEM NO.	PART NUMBER	DESCRIPTION	QTY.
1	TL10-3021UT	ProMaster undercarriage 36 Gal Water Tank	1
© 2	TI1392-01	10-4028 Frontal Water Tank Strap	1
© 3	TI1393-01	10-4028 Mid Water Tank Strap	1
4	AI3414-00	Rivet Nut M8 x 1.25mm Internal Thread, 0.5 to 7.1 mm Material Thickness (MCM#97217A461)	5
5	97646A334	18-8 Stainless Steel Serrated-Flange Hex Head Screw	5
6	AI1742-00	Fender Washer, M8, SS	5
7	255863AA-28	Strap cover extrusion - Skyjack Tanks, 28" cut.	1

UNLESS OTHERWISE SPECIFIED:
DIMENSIONS ARE IN INCHES
TOLERANCES:
FRACTIONAL ±1/16"
ANGULAR: MACH ±.25° BEND ±1°
TWO PLACE DECIMAL ±.05"
THREE PLACE DECIMAL ±.005"
INTERPRET GEOMETRIC TOLERANCING PER: ASME Y14.5M-1994
THIRD ANGLE PROJECTION

	NAME	DATE
DRAWN	A.C.	10/17/2025
CHECKED	R.T.	10/17/2025

MATERIAL: SEE BOM
FINISH: N/A

S&B FILTERS www.sbfilters.com

TITLE: ProMaster undercarriage 36 Gal Water Tank

SIZE	DWG. NO.	REV
C	10-3021	A

SCALE: 1:5 | DO NOT SCALE DRAWING | SHEET 1 OF 1