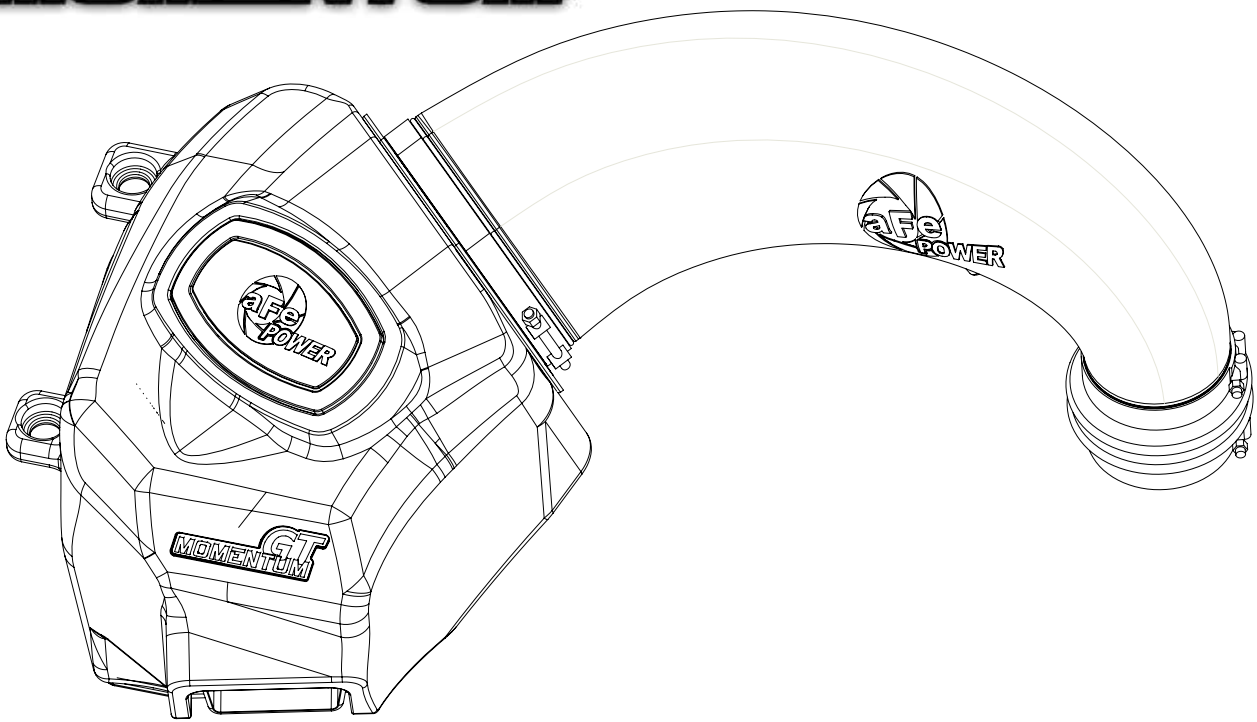

advanced FLOW engineering

Cold Air Intake System

Instruction Manual P/N: 50-70013DR

Make: **RAM** Model: **1500 (DT)** Year: **2019-2026** Engine: **V8-5.7L HEMI**

NOTE: Will NOT fit RAM 1500 Classic models.

- Please read the entire instruction manual before proceeding.
- Ensure all components listed are present.
- If you are missing any of the components, call customer support at 951-493-7100.
- Ensure you have all necessary tools before proceeding.
- Do not attempt to work on your vehicle when the engine is hot.

Retain factory parts for future use.

Label	Qty.	Description	Part Number
A	1	Air Filter (Pro DRY S)	21-91092
B	1	Tube	05-5070013R1
C	1	Housing	05-5070013R2
D	1	Plug, Silicone	05-01429
E	1	Coupling, Silicone Bellow	05-01389
F	1	Grommet, Rubber	03-50167
G	1	Fitting, Air Temp. Sensor	05-01454
H	1	Fitting, Vent	05-01339
I	2	Clamp, T-bolt (3-9/16"-3-7/8")	03-50498

Installation will require the following tools:
8mm nut driver or socket, 11mm deep socket and driver, 20mm wrench or adjustable wrench.

Warranty Information available at: https://afepower.com/contact#warranty

Note:
This intake system is not CARB exempt at this time and is not legal for sale in California or use on vehicles registered with the California Department of Motor Vehicles.

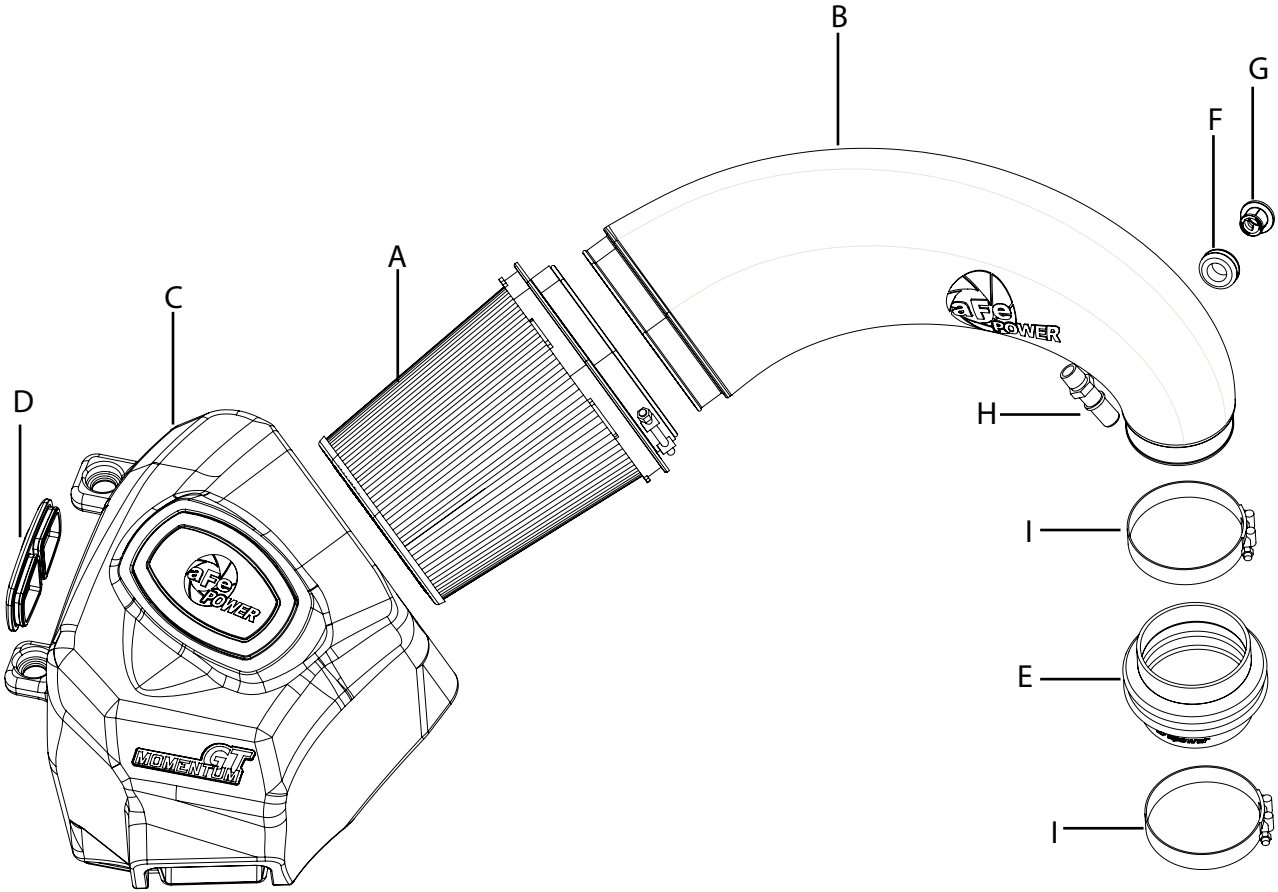
B
G
F
A
C
D
H
I
E
I

Figure A

Refer to Figure A for Steps 1-4.

NOTE: All Installation photos are of the black version of this kit. All steps are the same.

Step 1: Using an 8mm nut driver, loosen the stock clamps (1) at the throttle body and filter housing.

Step 2: Disconnect the temperature sensor harness (2) from the stock intake tube.

Step 3: Disconnect the crank case vent line (3) by disengaging the quick release connector and gently pulling the line away from the fitting on the stock intake tube.

Step 4: Remove the stock intake tube by pulling up on the throttle body side, and away from the stock filter housing.

FigureB

Refer to Figure B for Step 5.

Step 5: Remove the stock filter housing by gently pulling straight upwards until the housing disengages from 4 mounting pegs and the inlet scoop towards the front of the vehicle. Set aside.

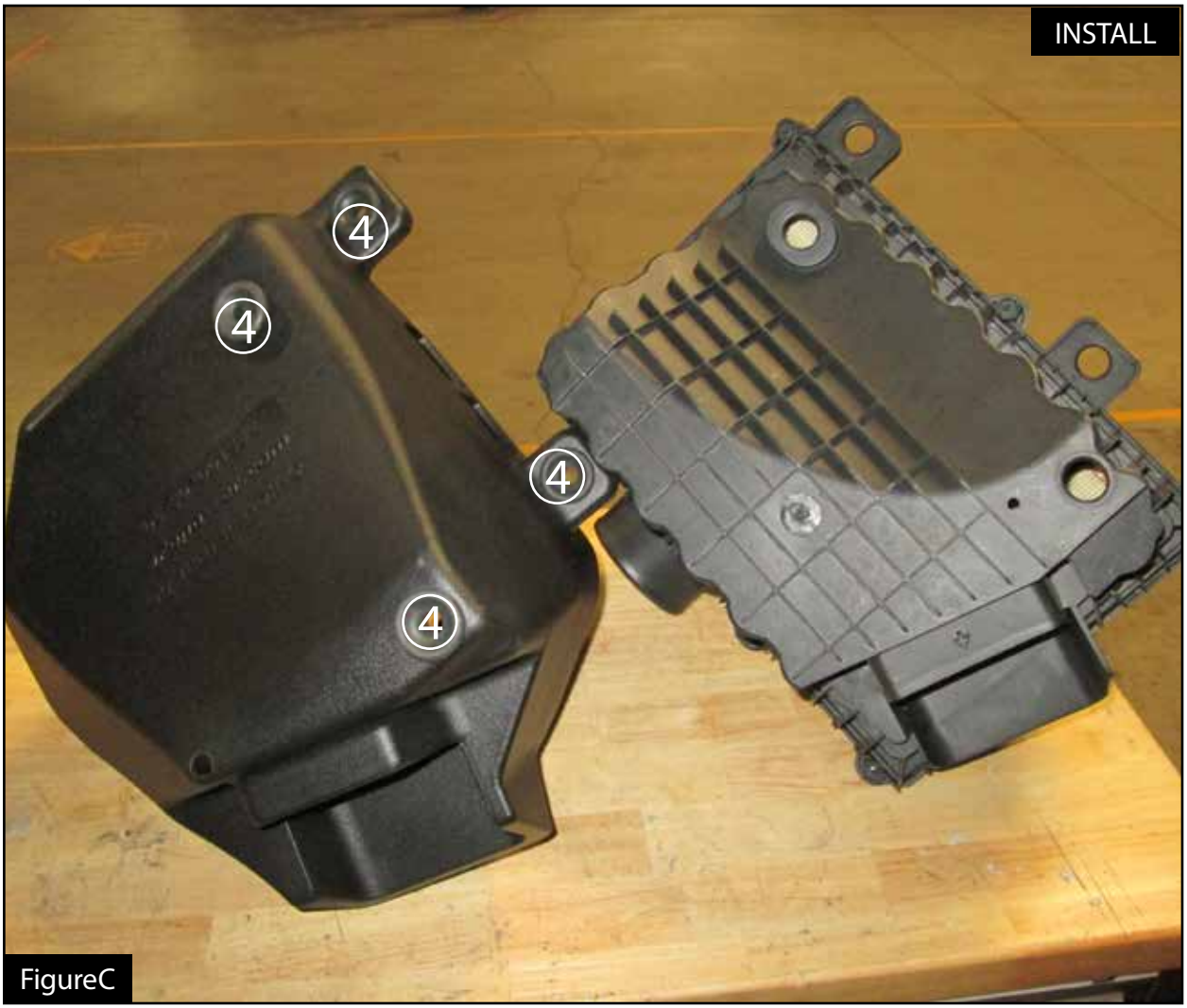

Refer to Figure C for Step 6.

Step 6: Transfer all 4 rubber grommets (4) from the stock filter housing to your aFe POWER airbox as shown.

Figure D

Refer to Figure D for Steps 7-9.

Step 7: Install the provided rubber grommet and sensor fitting (5) into the aFe intake tube as shown.

Step 8: Install the provided NPT fitting (6) into your aFe intake tube in the threaded insert as shown. Tighten using a 20mm wrench or adjustable wrench.

Step 9: Remove the temperature sensor (7) from the stock intake tube by rotating a quarter turn and gently pulling outward. Reinstall the sensor into the aFe intake tube rotating a quarter turn to lock it into place.

Refer to Figure E for Step 10.

Step 10: Install your aFe air filter and clamp (8) into the airbox before installing into the vehicle.

Figure F

Refer to Figure F for Step 11.

Step 11: Install the airbox into the vehicle by lining up the 4 mounting points and the air inlet scoop and gently pressing down until fully seated.

Figure G

Refer to Figure G for Steps 12-13.

Step 12: Install the aFe coupler (9) onto the throttle body using one of the supplied T-bolt clamps (10). Tighten the clamp at the throttle body using an 11mm deep socket and driver.

Step 13: Place the remaining T-Bolt clamp (11) onto the coupler, but do not tighten

FigureH

Refer to Figure H for Step 14.

Step 14: Install the aFe intake tube into both the air filter and throttle body coupler. Tighten the clamps at both ends using an 11mm deep socket and driver.

Figure I

Refer to Figure I for Step 15.

Step 15: Reconnect the temperature sensor wire harness (12) and crank case vent connector hose (13).

Figure J

Refer to Figure J for Step 16.

Step 16: (Optional) Use the provided plug (14) to close off the additional air inlet if you wish to completely seal the airbox. Best performance gains are obtained without the plug. Check that all components are tight and secure. Your installation is now complete. Thank you for choosing aFe POWER!

NOTE: Check all bolts, clamps, and connectors after 100-200 miles.

Page left blank intentionally

Page left blank intentionally

advanced FLOW engineering, inc.
Corona, CA 92879
https://afepower.com/contact