2753 Michigan Road • Madison, Indiana 47250 • 855-743-3427

INSTALLATION INSTRUCTIONS

Sport Accessory Bar:
for Polaris® General™

Do not discard packaging until product has been successfully installed.

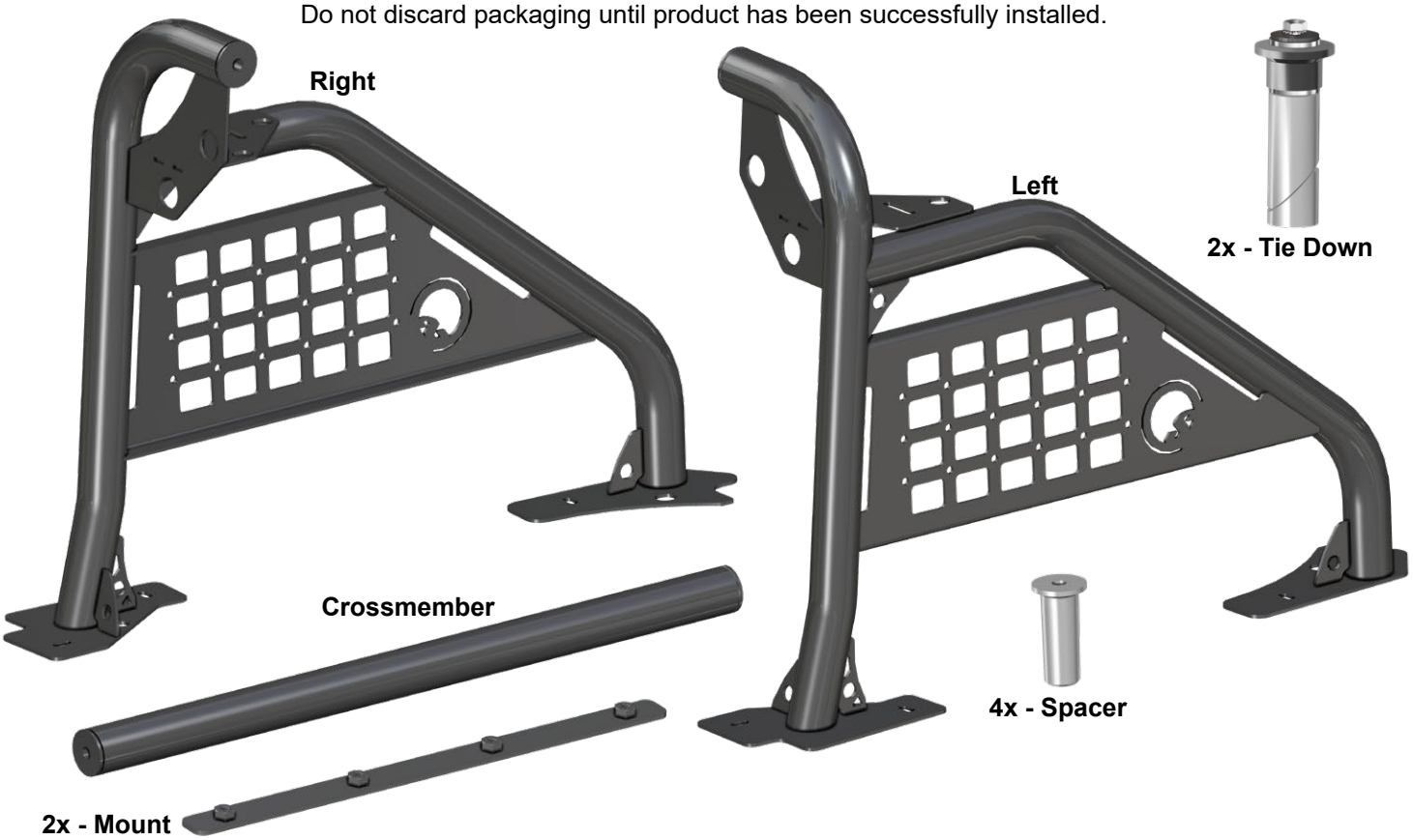

CUSTOMER NOTIFICATION AND DISCLAIMER LIABILITY

This product is a modification for utility task vehicles and all terrain vehicles. Use this product at your own risk.

Warranty and Liability Limitations. The Buyer hereby assumes all risks associated with the use and/or installation of this product. Buyer waives all liability claims against SuperATV® of any kind or nature, including, but not limited to, liability for penalties, fines, property damage, personal injury or death, to the fullest extent permitted by law. Buyer acknowledges and agrees that SuperATV® is not liable for any direct, indirect, incidental, consequential or special damages, including but not limited to, damage, loss of life, loss of property or equipment, loss of profits or revenue, injury, or claims from any individual or entity arising from the use of this product.

The warranty for this product, if any, may give you ("Buyer") specific legal rights, and Buyer may also have other rights which may vary from state to state. The installation of this product may void or otherwise adversely affect your factory warranty.

Consult your vehicle warranty before using this Product. Under no circumstances will SuperATV® be liable for the voidance of the Buyer's vehicle warranty. Buyer assumes all risk and responsibility if a manufacturer and/or dealer voids the Buyer's vehicle warranty due to use of this Product.

Safety and Laws. Operate your vehicle at all times in a safe manner. You must abide by all local, state, and federal laws, including but not limited to vehicle safety, traffic laws, and ordinances. It is your responsibility to know the laws and how they apply to you. The installation of this product may violate certain local, state, and federal laws. Be advised that laws vary depending on town, city, county, state, etc. Use of this product on public streets, roads, or highways may be in violation law. The Buyer is solely and exclusively legally and personally responsible for any violation of the law by the installation or use of this product. In no case will SuperATV® be held liable if Buyer violates the law or uses the product in an unsafe manner.

The Buyer is responsible to fully understand the capability and limitations of his/her vehicle according to manufacturer specifications, warnings and instructions and agrees to hold SuperATV® harmless from any damage resulting from failure to adhere to such specifications, warnings and/ or instructions. The Buyer is also responsible to obey all applicable federal, state, and local laws when operating his/her vehicle while using this product, and the Buyer agrees to hold SuperATV® harmless from any violation thereof.

Installation. The installation of this product on your vehicle indicates that you have had the opportunity to inquire about applicable local, state, and federal laws and ordinances and that you have read and understand, and accept all of the terms of, this Disclaimer.

SuperATV® shall not be responsible for the proper installation, use, and service of this product. Rather, the Buyer shall be solely responsible for the installation of the product and any damage that may be done to the vehicle or vehicle components as a result of modifications made by the Buyer.

Need help with your installation?

sales@superatv.com

www.superatv.com

1-855-743-3427

8:00am - 8:00pm EST M-Th
8:00am - 7:00pm EST Friday
9:00am - 2:00pm EST Saturday

Read instructions and view illustrations before beginning.

Thank You For Choosing

© 2023 SuperATV.com®. All Rights Reserved.

Place Bed in open position before beginning installation.

- Install Spacers and Tie Down to locations shown.

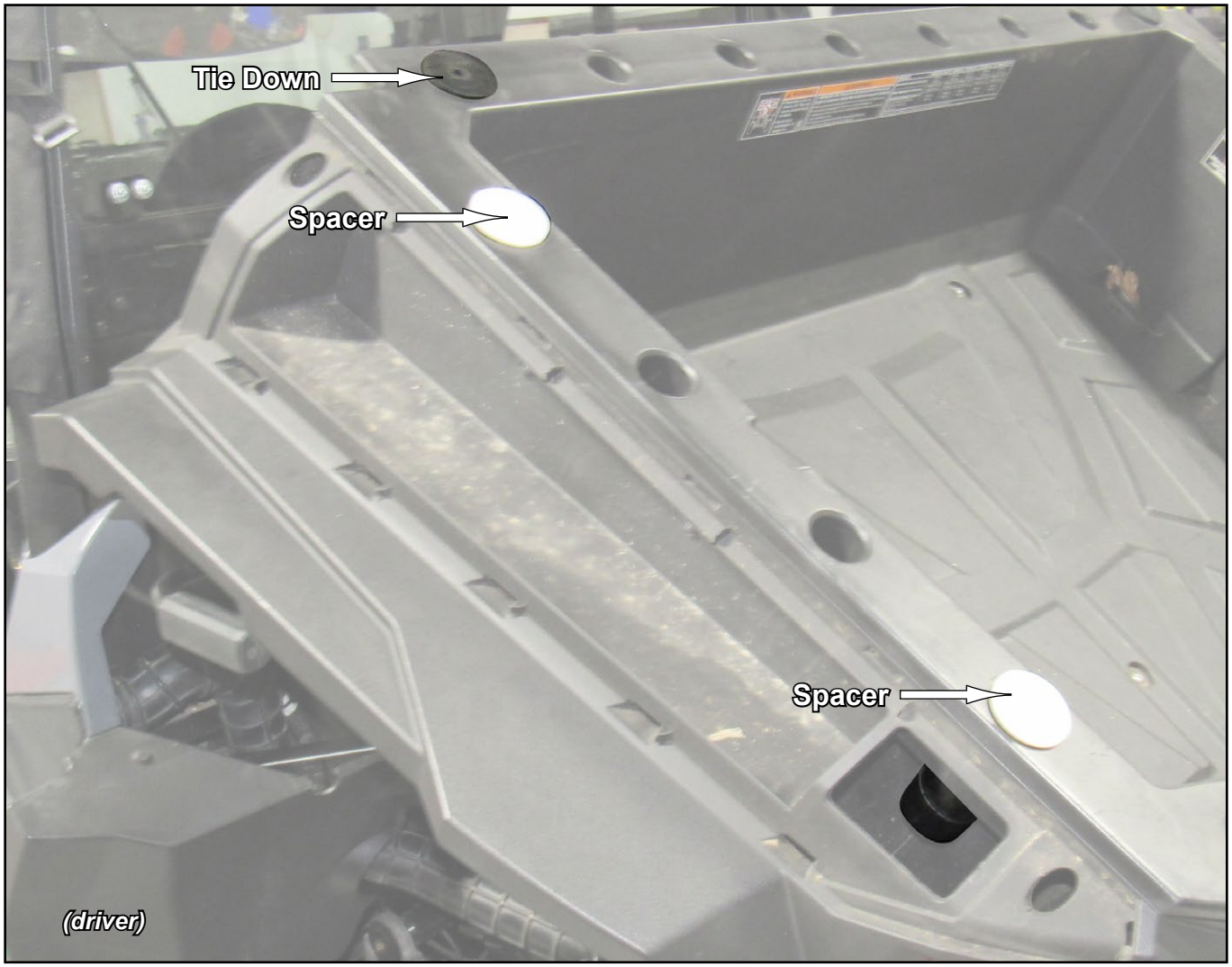

- Install Mount into cavity in Bed. Weld Nuts to face down.

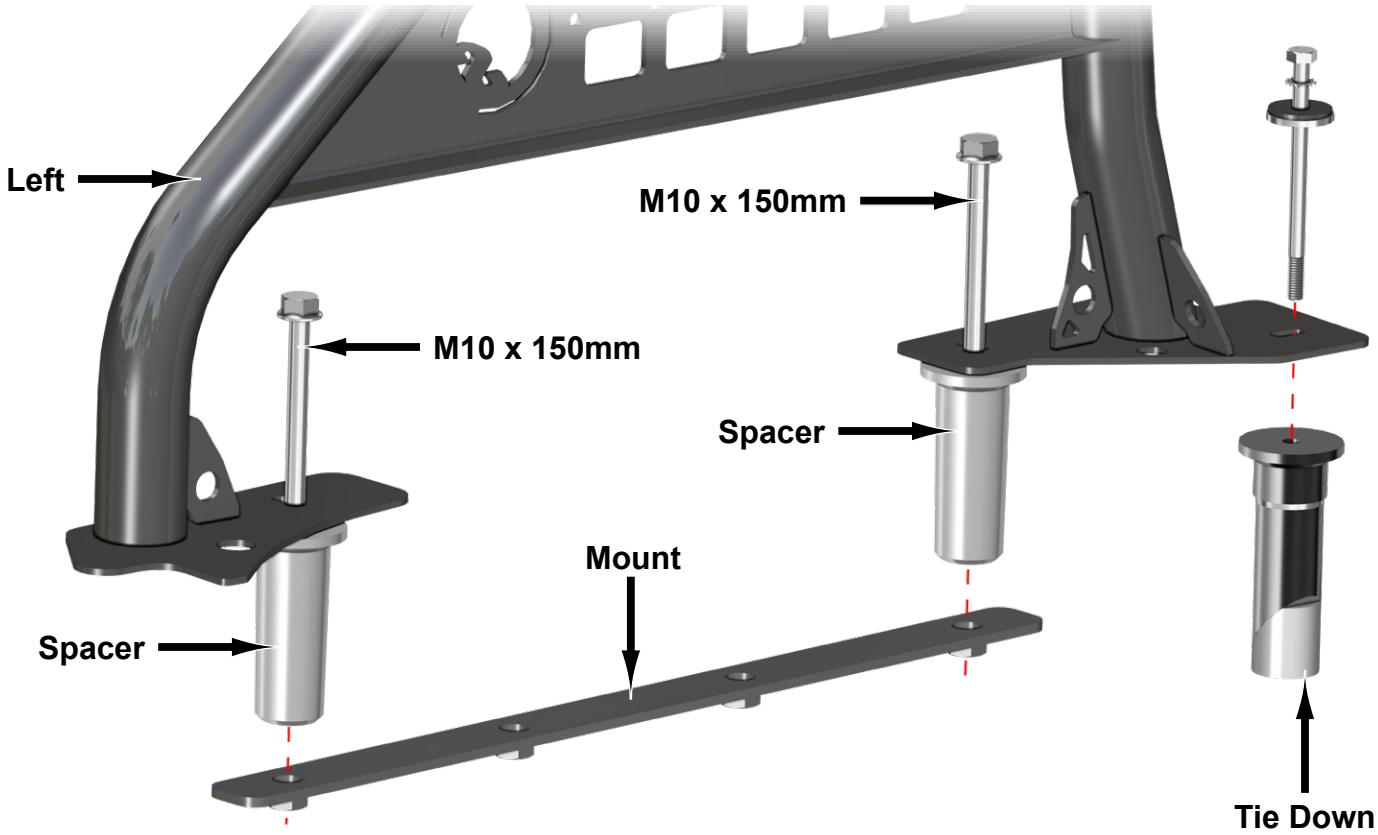

- Install Left to components shown; tighten hardware.

- Repeat for passenger side installation.

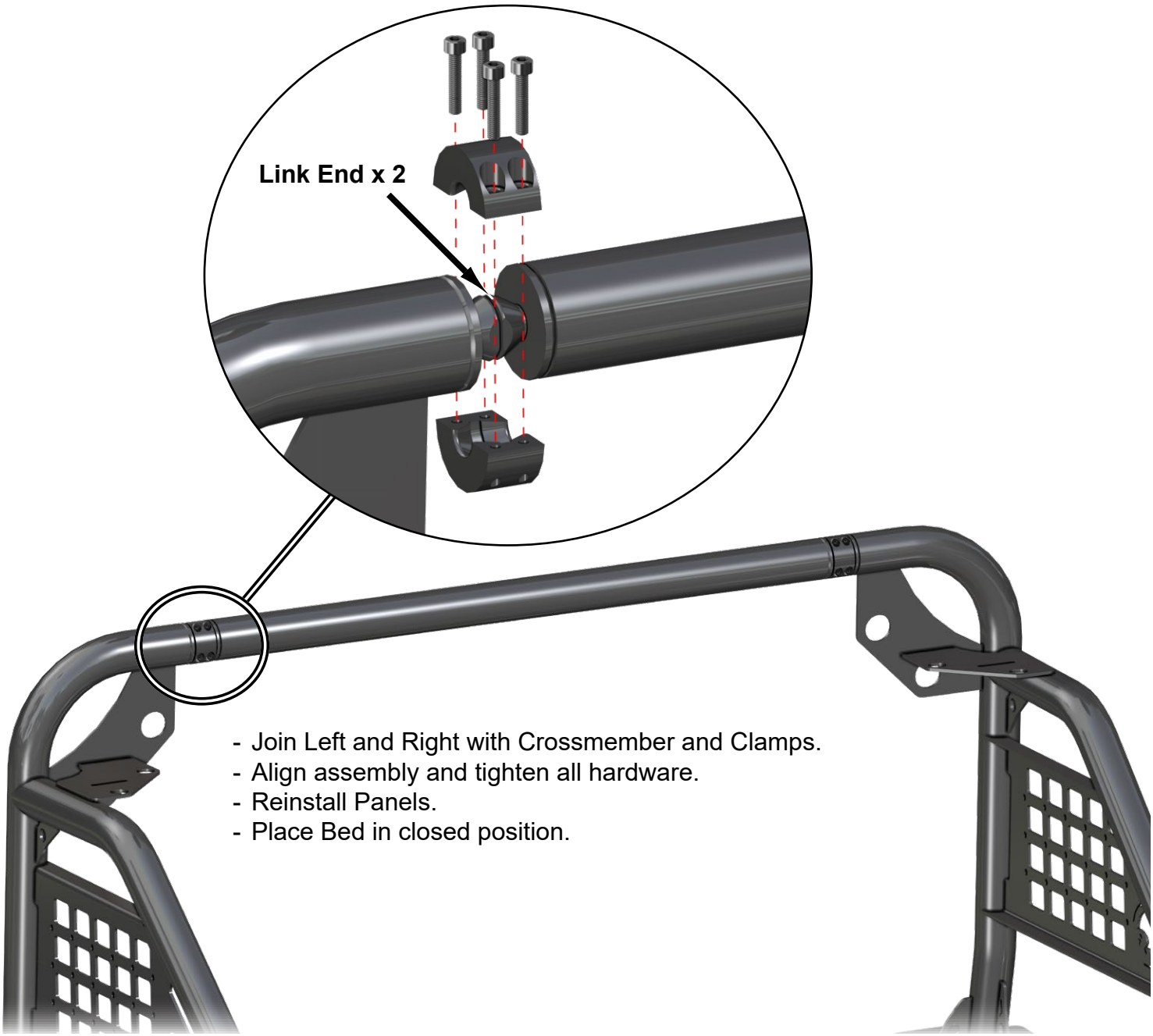

- Join Left and Right with Crossmember and Clamps.
- Align assembly and tighten all hardware.
- Reinstall Panels.
- Place Bed in closed position.

POLARIS
GENERAL