2753 Michigan Road • Madison, Indiana 47250 • 855-743-3427

INSTALLATION INSTRUCTIONS

Fold Down Glass Windshield:

for Can-Am Maverick Trail

- SuperATV does not recommend keeping Windshield installed while transporting on an open air trailer. Remove or secure with straps.
- Do not discard packaging until product has been successfully installed.

Clamp x 2

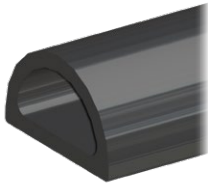

Gasket

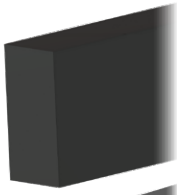

Foam

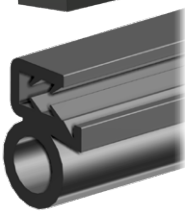

90° Seal

(kit contents continue on following page)

Need help with your installation?

sales@superatv.com

www.superatv.com

1-855-743-3427

8:00am - 8:00pm EST M-Th
8:00am - 7:00pm EST Friday
9:00am - 2:00pm EST Saturday

Read instructions and view illustrations before beginning.

Thank You For Choosing

© 2023 SuperATV.com®. All Rights Reserved.

(kit contents continued)

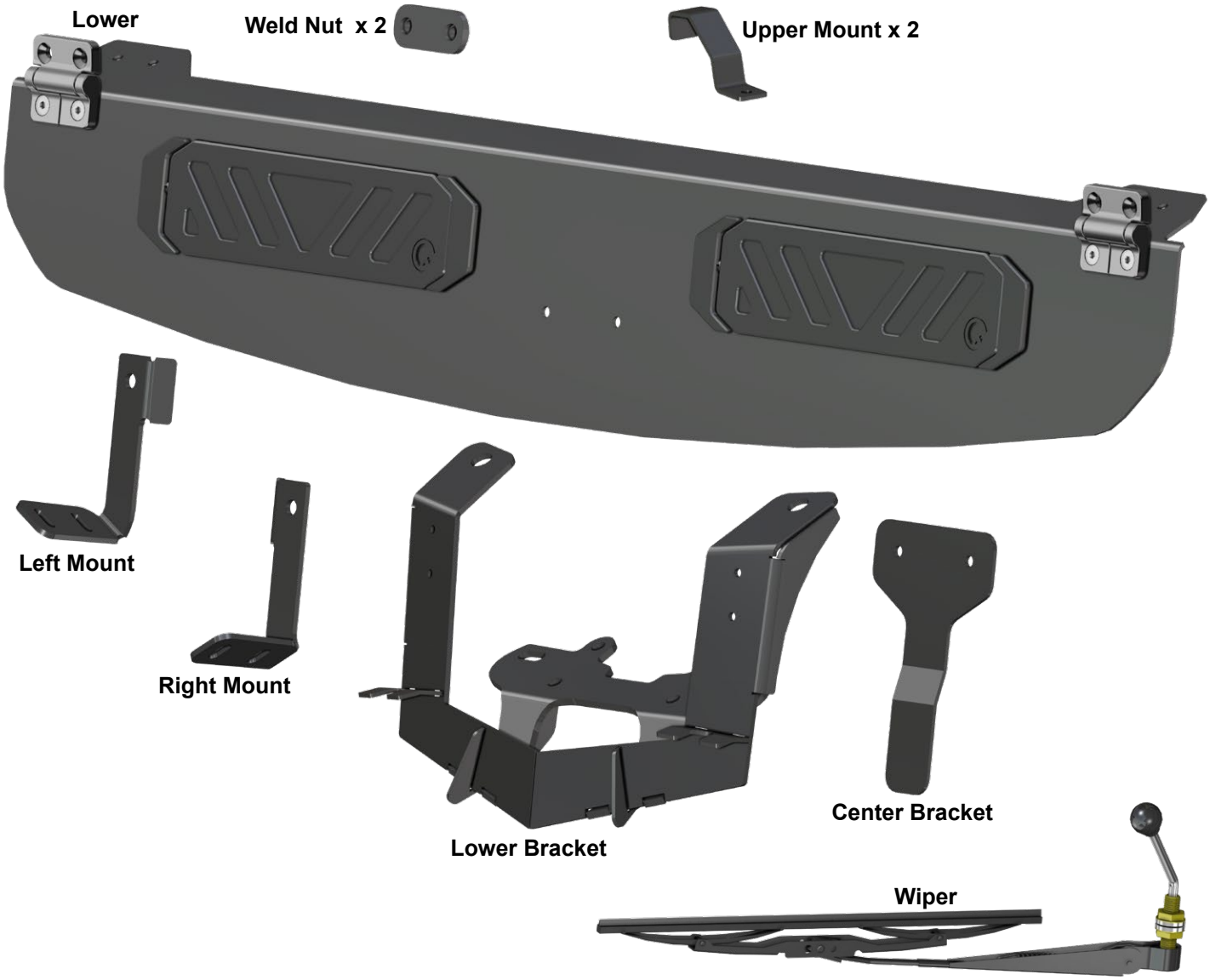

When assembling, **do not tighten hardware completely.**

Liability Statement

SuperATV's® products are designed to best fit user's ATV/UTV under stock conditions. Adding, modifying, or fabricating any factory or aftermarket parts will void any warranty provided by SuperATV® and is not recommended. SuperATV's® products could interfere with other aftermarket accessories. If user has aftermarket products on machine, contact SuperATV® to verify that they will work together.

Although SuperATV® has thousands of satisfied customers, user should be aware that installing lift kits, long travel, or suspension kits, tires, etc. will change the ride of machine and may increase maintenance and part wear. Operating any off-road machine while, or after, consuming alcohol and/or drugs increases risk of bodily harm or death. No warranty or representation is made as to this product's ability to protect user from severe injury or death. SuperATV® urges operators and occupants to wear a helmet and appropriate riding gear at all times.

By purchasing and installing SuperATV® products, user agrees that should damages occur, SuperATV® will not be held responsible for loss of time, use, labor fees, replacement parts, or freight charges. SuperATV®, nor any 3rd party, will not be held responsible for any direct, indirect, incidental, special, or consequential damages that result from any product purchased from SuperATV®. The total liability of seller to user for all damages, losses, and causes of action, if any, shall not exceed the total purchase price paid for the product that gave rise to the claim.

SuperATV® will warranty only parts provided by SuperATV®. Any damage or problems with OEM housings, bearings, seals, or other manufacturers' products will not be covered by SuperATV®. SuperATV® parts and products are not warrantied if item was not installed properly, misused, or modified.

Installing, adding, modifying, or fabricating any factory or aftermarket product to your ATV/UTV may violate certain local, state, and federal laws. Be advised that laws vary depending on town, city, county, state, etc. Use of certain products on public streets, roads, or highways may be in violation law. The Buyer is solely and exclusively legally and personally responsible for any violation of the law by the installation or use of the product. You must abide by all local, state, and federal laws, including but not limited to vehicle safety, traffic laws, and ordinances. It is your responsibility to know the laws and how they apply to you.

The Buyer is responsible to fully understand the capability and limitations of his/her vehicle according to manufacturer specifications, warnings and instructions and agrees to hold SuperATV® harmless from any damage resulting from failure to adhere to such specifications, warnings and/ or instructions. The Buyer is also responsible to obey all applicable federal, state, and local laws and ordinances when operating his/her vehicle while using this product, and the Buyer agrees to hold SuperATV® harmless from any violation thereof.

- Install Center Bracket to Lower with hardware shown; tighten.

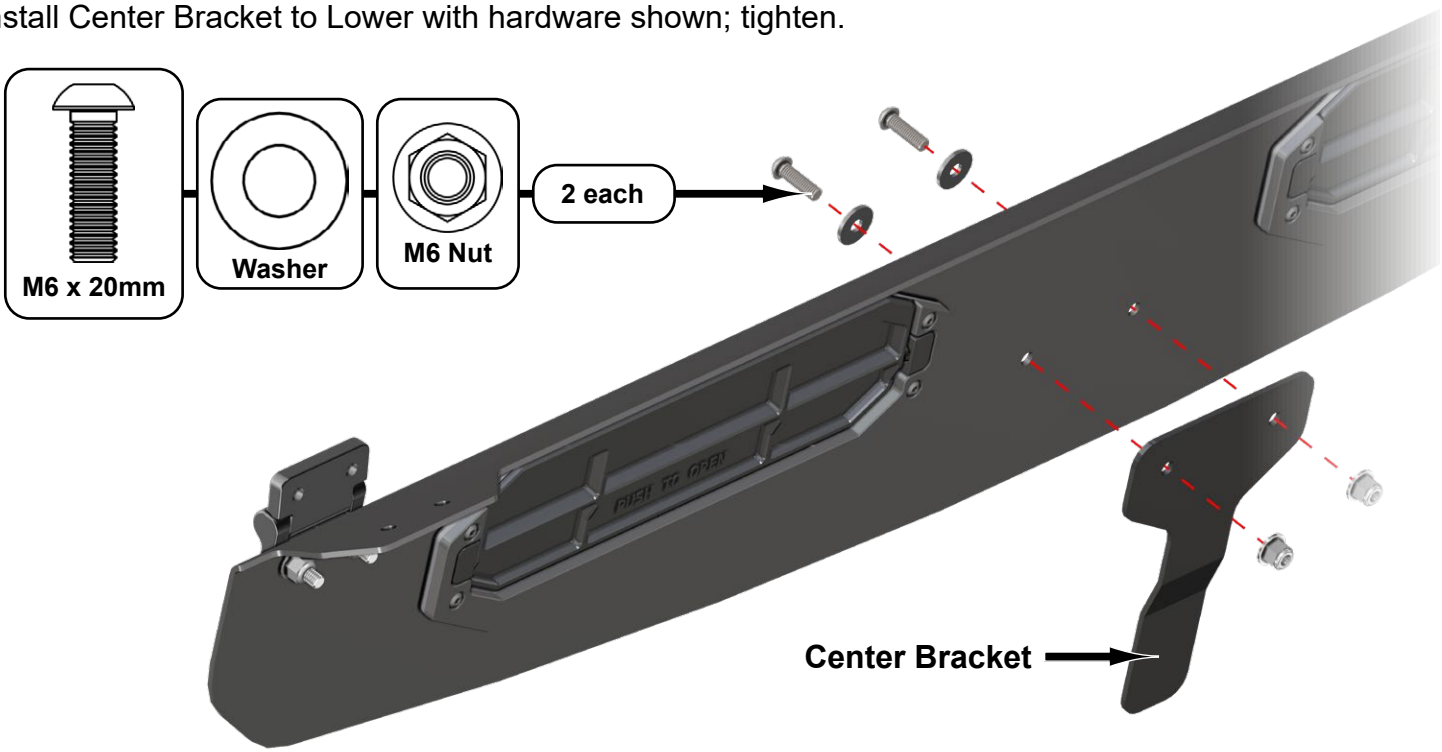

To ease installation, soak 90° Seal in hot water before cutting or installing to increase flexibility.

- Install (2) pieces of provided 90° Seal to Lower.

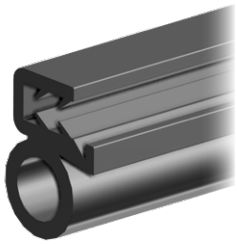

Bulb to always face towards vehicle.

To ease installation, soak 90° Seal in hot water before cutting or installing to increase flexibility.

- Install provided 90° Seal to Upper.

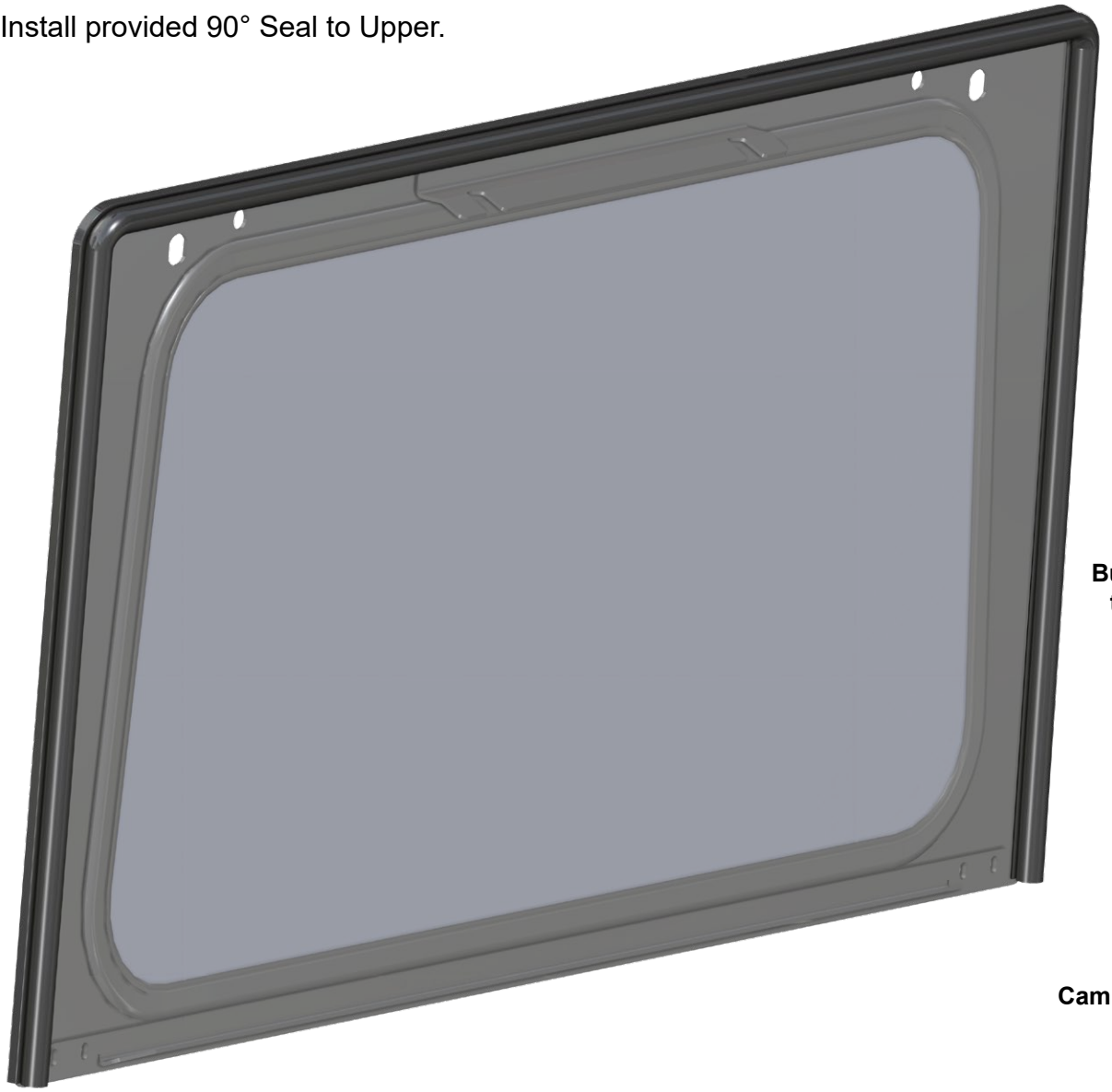

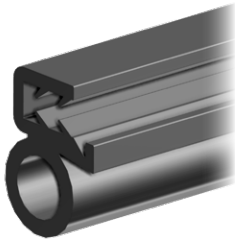

Bulb to always face towards vehicle.

Cam Latch

- Separate Cam Latches and install to Windshield; tighten.

- Install Left Mount to Lower with hardware shown.
- Loosen Clamp and install Clamp to Left Mount with hardware shown.

- Repeat steps for Right Mount and Clamp installation.

- Install Lower to machine.
- Secure Clamps to Cage.

- Install Gasket to Lower.

- Install Upper Mount to Upper with hardware shown.
- Repeat for opposite end of Upper.

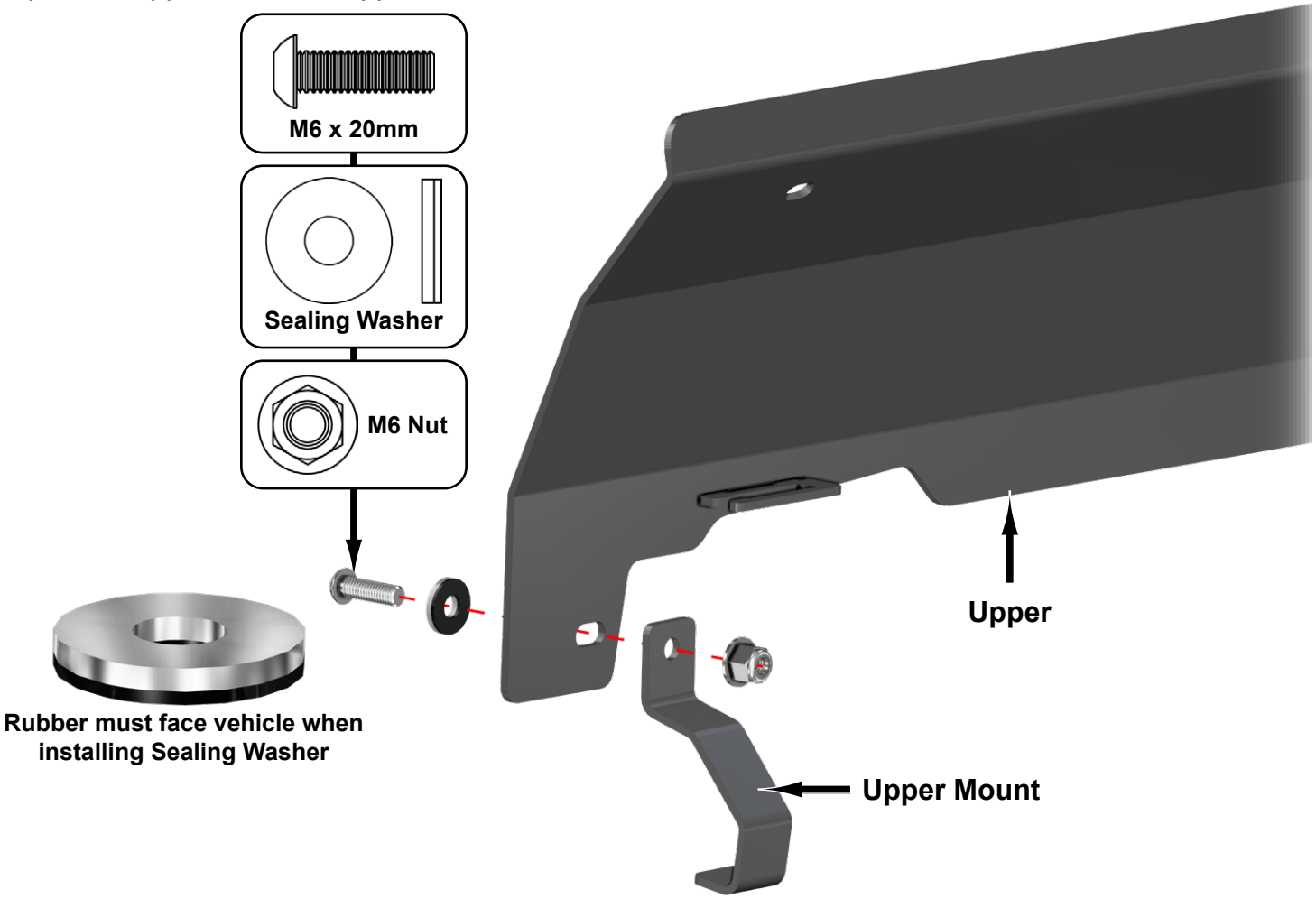

- Install Upper to machine with hardware shown; tighten.

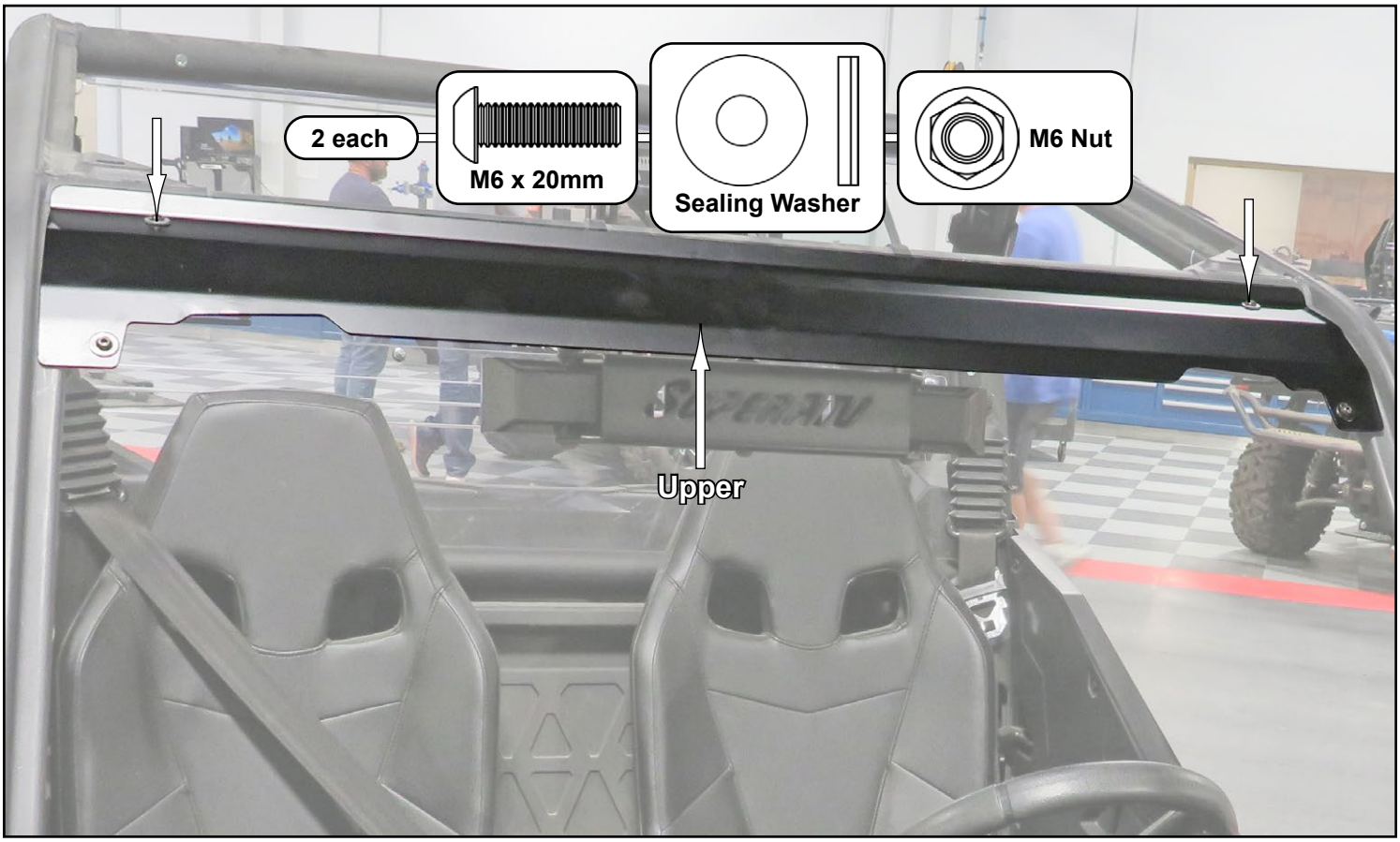

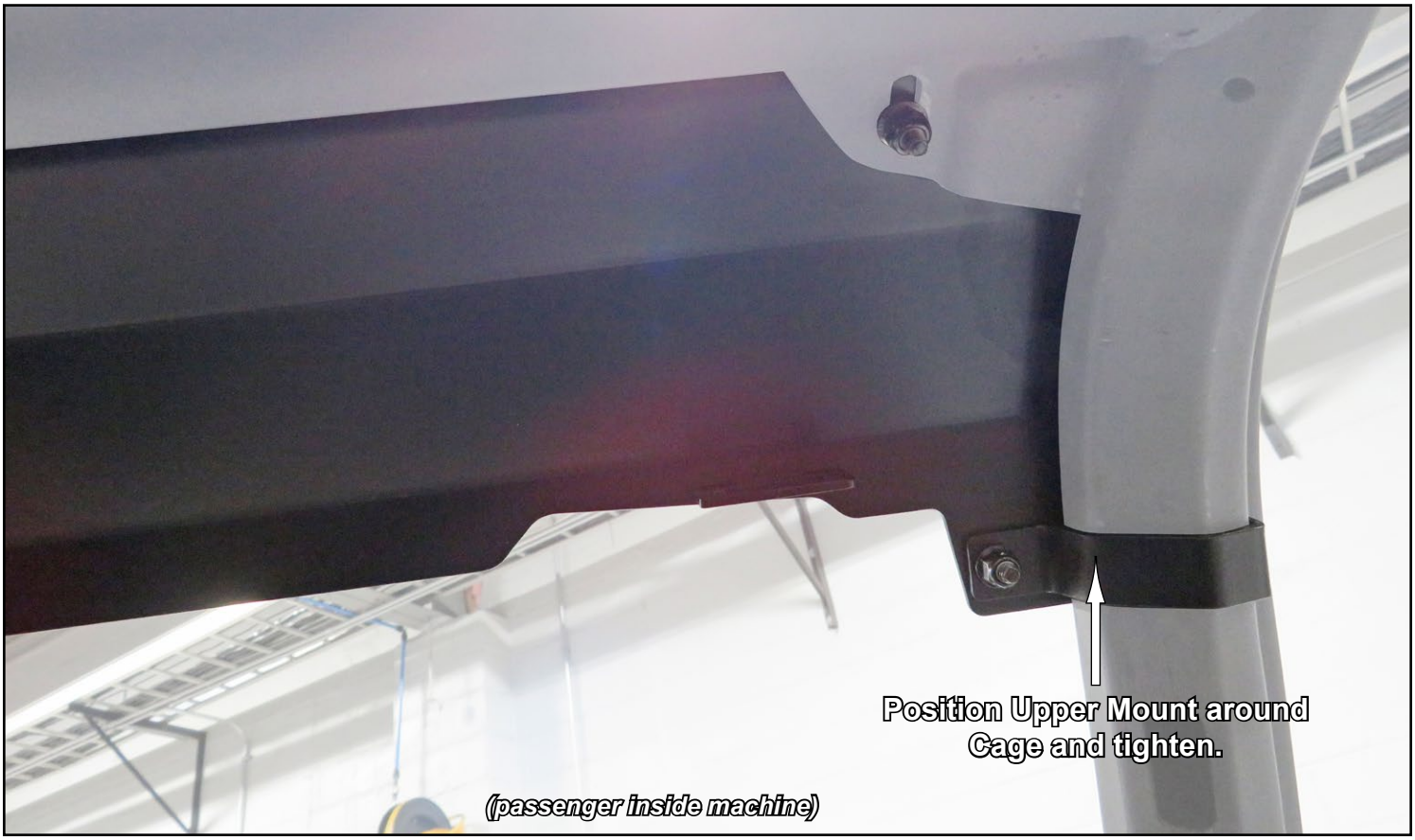

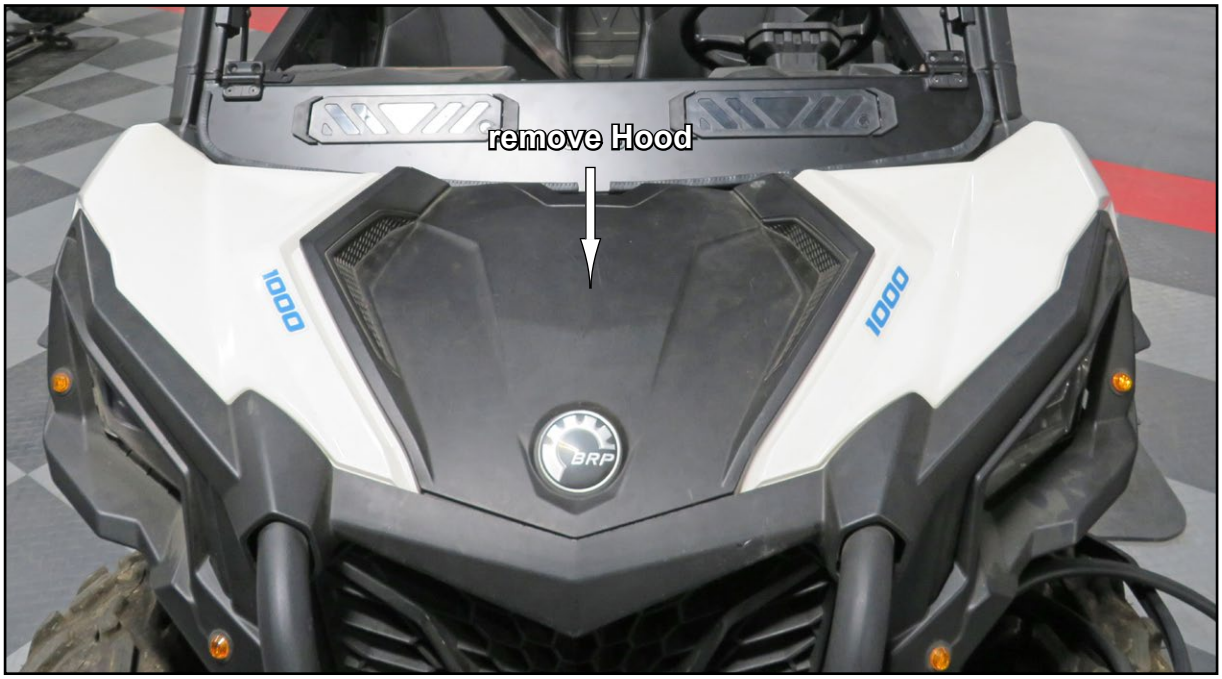
remove Hood
1000
1000
BRP

remove Grille
remove hardware
1000
1000

- Install Straps to Lower Bracket with hardware shown; tighten.
- Install Bumpers to Lower Bracket.

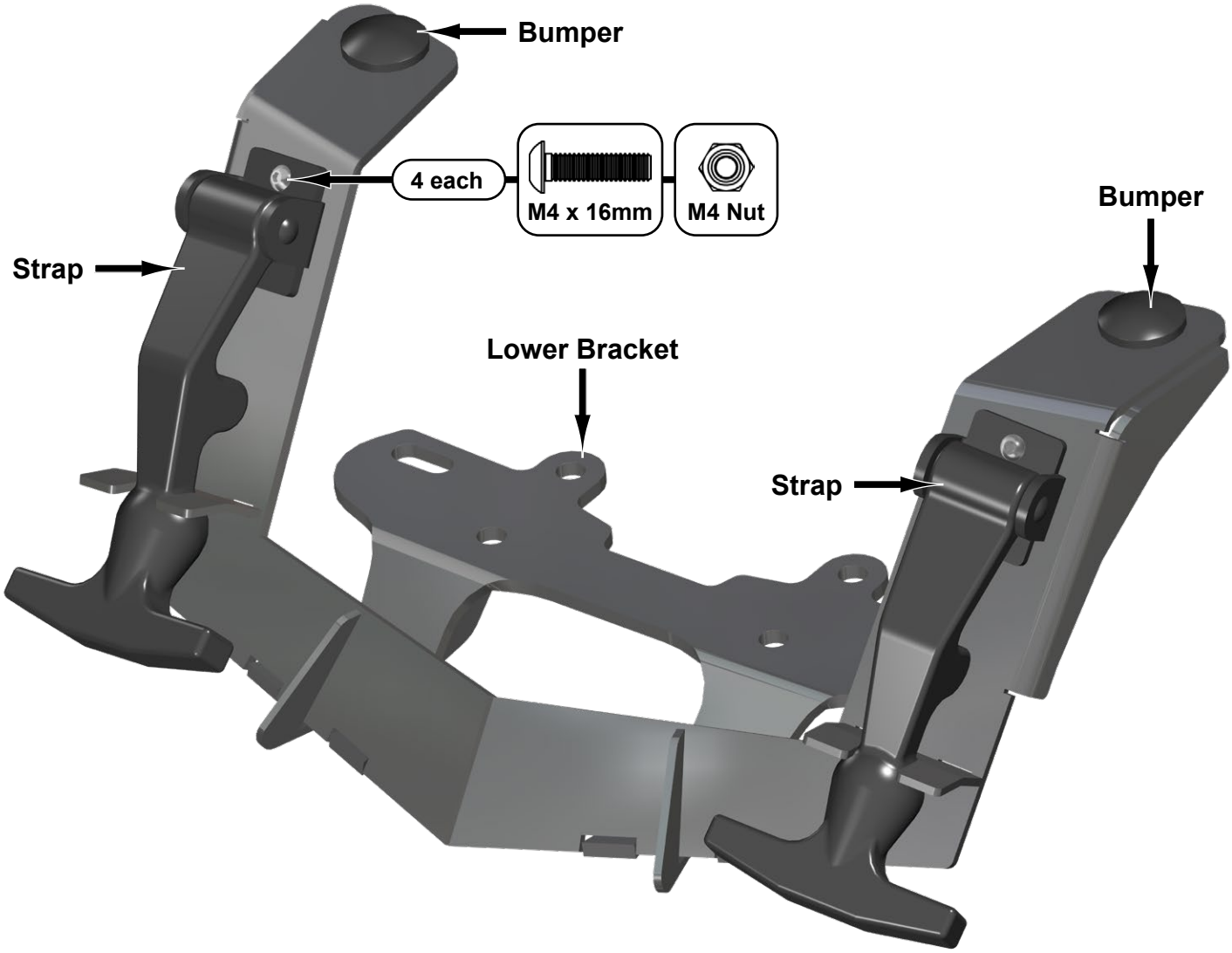

- Install Lower Bracket to machine with stock or hardware shown below.
- *Lower Bracket will go underneath plastic.*

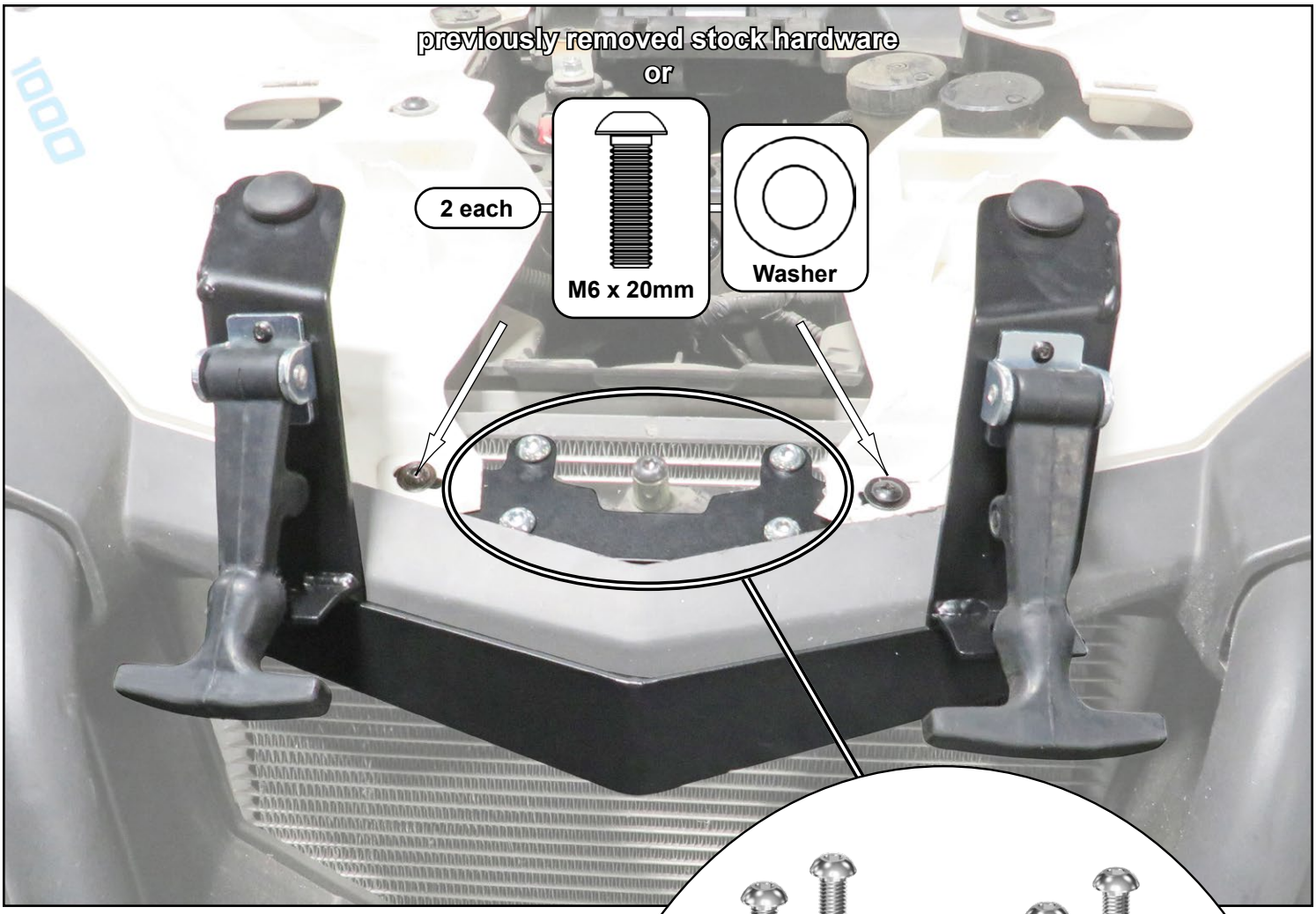

- Use hardware shown and clamp Lower Bracket to Frame.

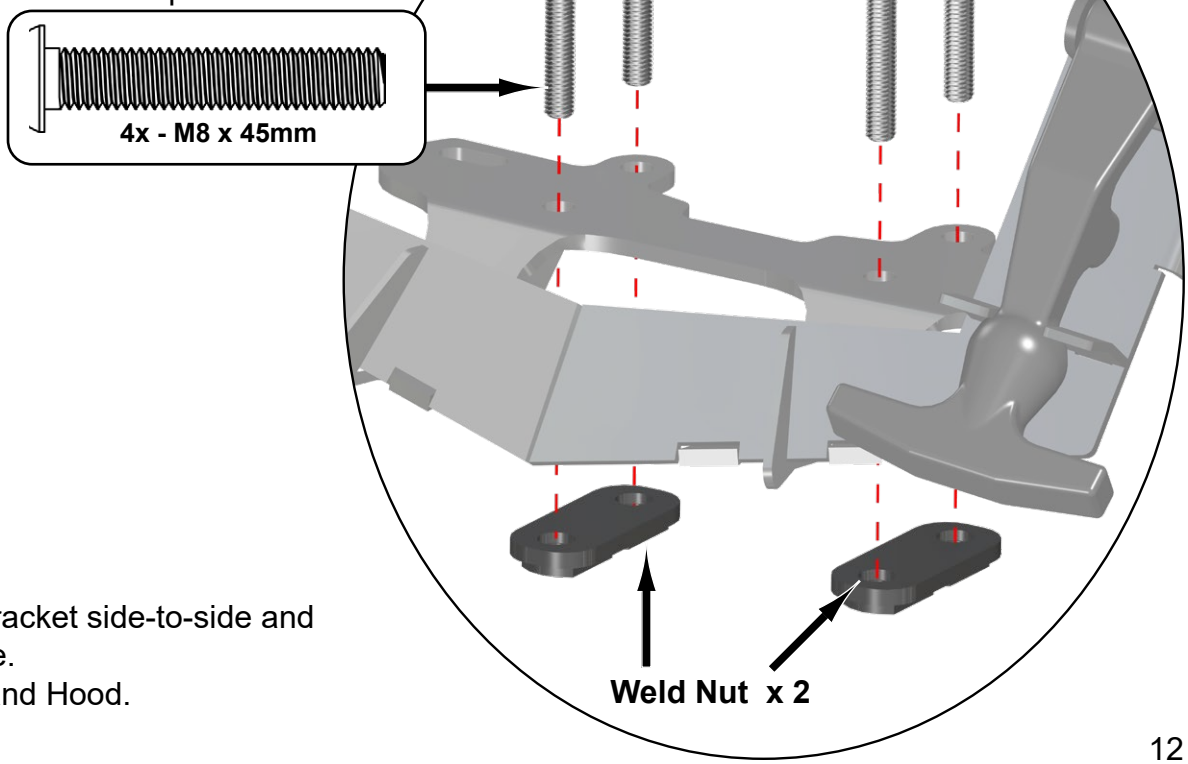

- Center Lower Bracket side-to-side and tighten hardware.
- Reinstall Grille and Hood.

- Place Windshield onto Lower Bracket and machine.
- Secure Windshield to Hinges on Lower with hardware shown; tighten.

- Place Windshield into closed position, engage Latches and align to machine.
- TIGHTEN ALL HARDWARE.

- Separate components shown from Wiper and assemble to Windshield; tighten.

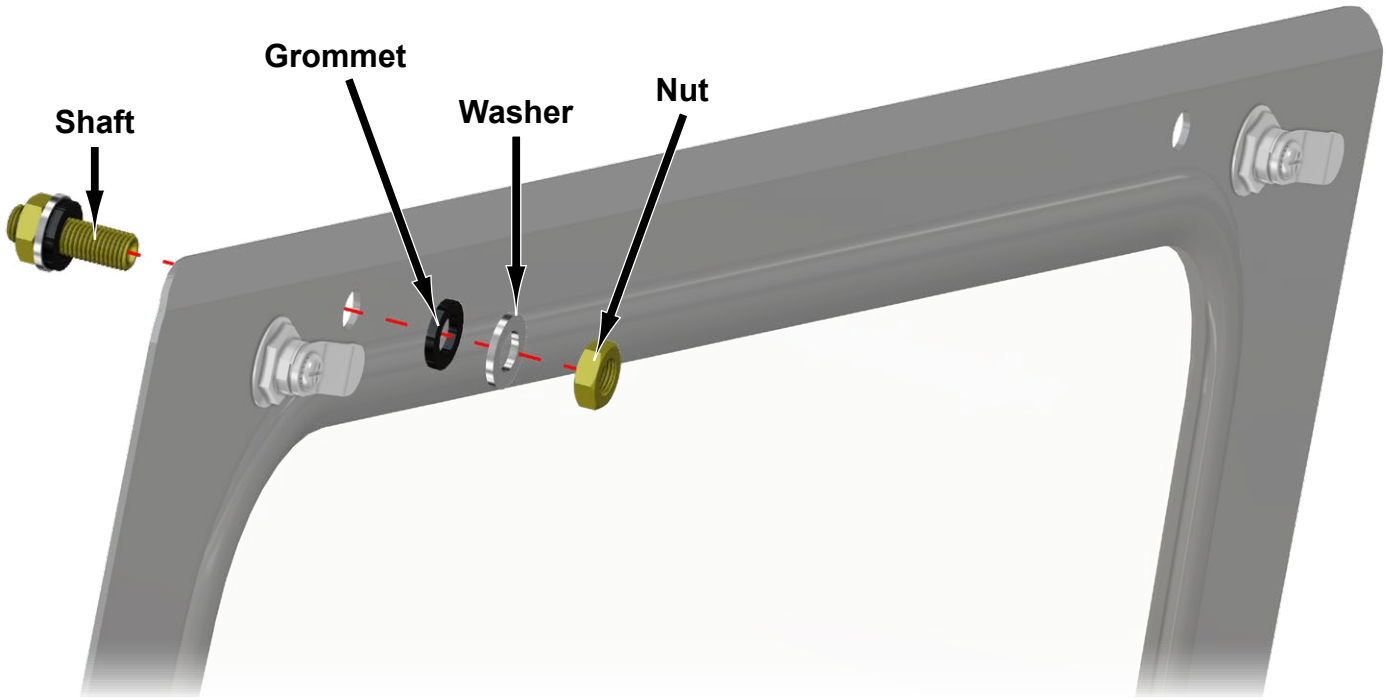

- Install Wiper and Handle; tighten.

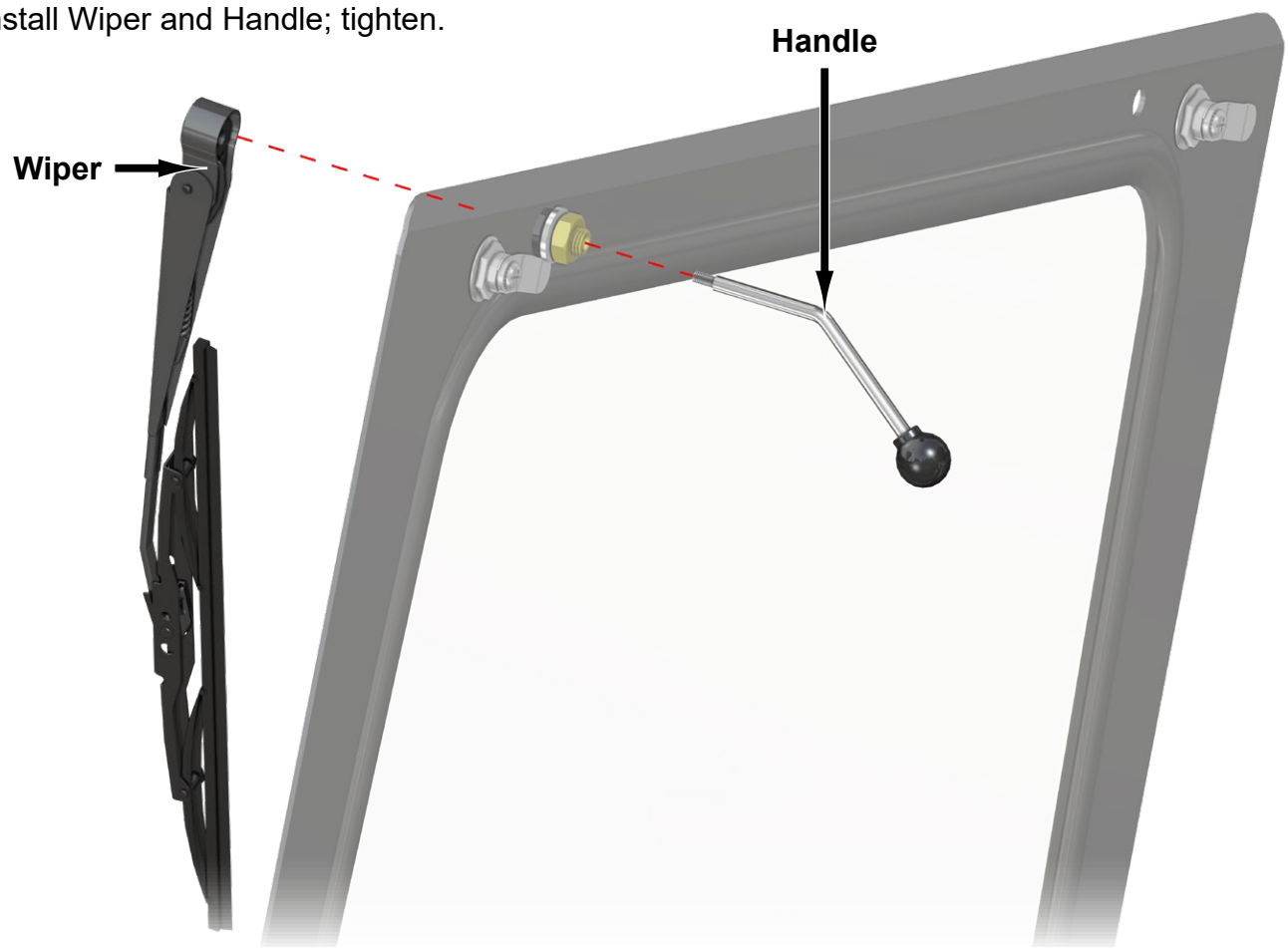

Insert Plug into Windshield.