2753 Michigan Road • Madison, Indiana 47250 • 855-743-3427

INSTALLATION INSTRUCTIONS

6” Lift Kit: for Can-Am Defender

A Press or Ball Joint tool is required to remove and install Ball Joints.

Item	Description
A	Upper Right Front
B	Upper Left Front
C	Lower Left Front
D	Lower Right Front

Item	Description
E	Upper Right Rear
F	Upper Left Rear
G	Lower Left Rear
H	Lower Right Rear

- *Rear Swaybar will not be used.*
- *If present, remove Front Swaybar.*

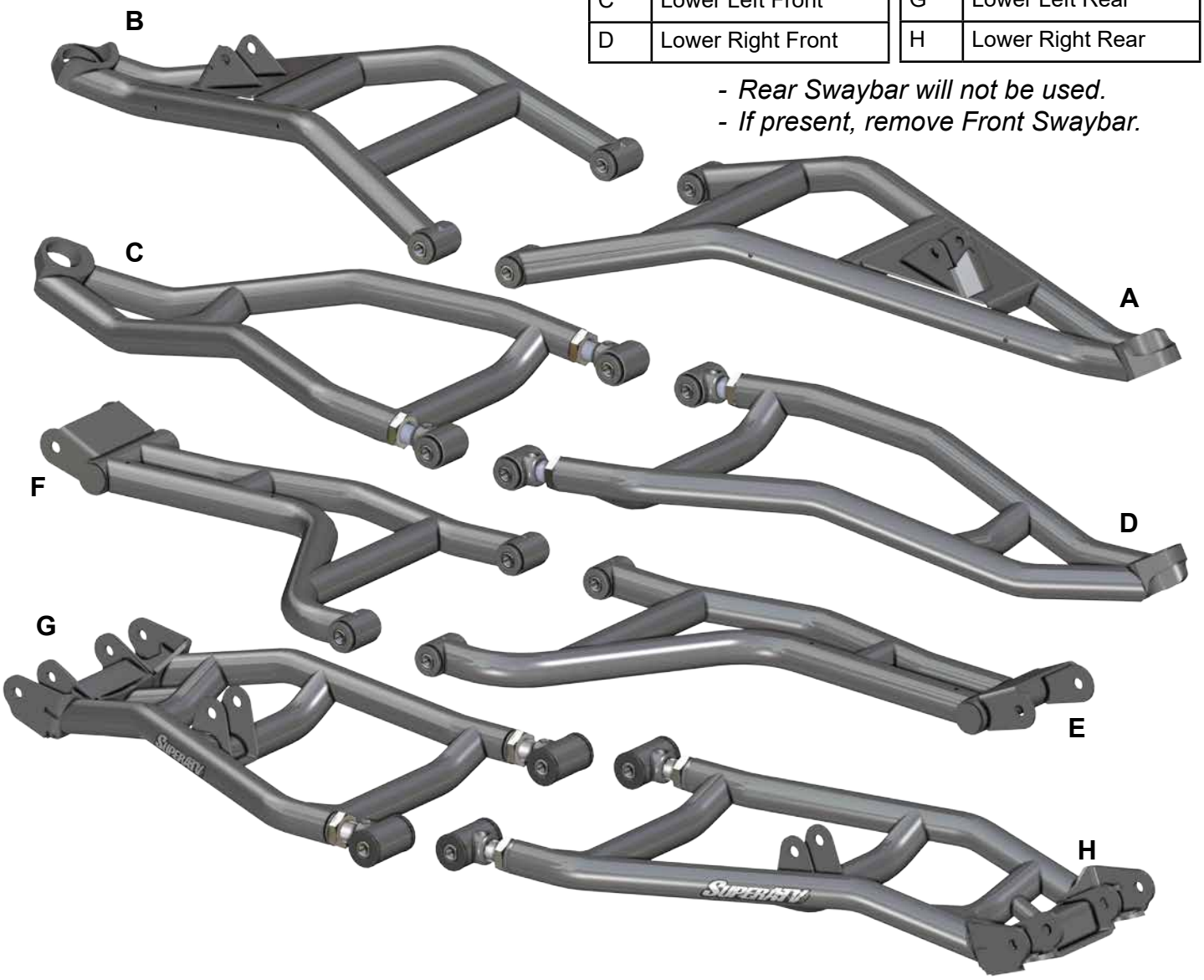

(kit contents continue on following pages)

Need help with your installation?

sales@superatv.com

www.superatv.com

1-855-743-3427

8:00am - 8:00pm EST M-Th
8:00am - 7:00pm EST Friday
9:00am - 2:00pm EST Saturday

Read instructions and view illustrations before beginning.

Thank You For Choosing

© 2018 SuperATV.com®. All Rights Reserved.

(kit contents continued)

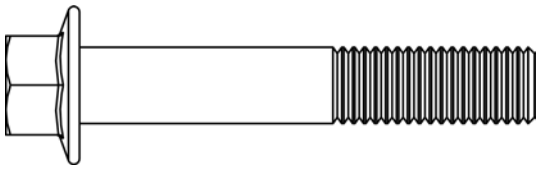

8x M10-1.50 x 60mm Lg. FHCS

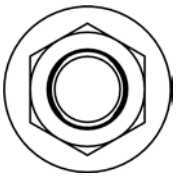

8x M10-1.50 Nylock Nut

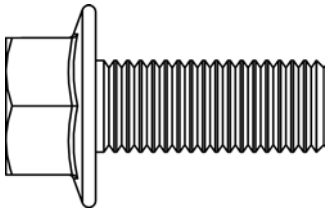

4x M12-1.75 x 30mm Lg. FHCS

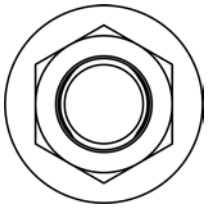

4x M12-1.75 Nylock Nut

Straight Fitting 8x

90° Fitting 8x

Liability Statement

SuperATV's® products are designed to best fit user's ATV/UTV under stock conditions. Adding, modifying, or fabricating any factory or aftermarket parts will void any warranty provided by SuperATV® and is not recommended. SuperATV's® products could interfere with other aftermarket accessories. If user has aftermarket products on machine, contact SuperATV® to verify that they will work together.

Although SuperATV® has thousands of satisfied customers, user should be aware that installing lift kits, long travel, or suspension kits, tires, etc. will change the ride of machine and may increase maintenance and part wear. Operating any off-road machine while, or after, consuming alcohol and/or drugs increases risk of bodily harm or death. No warranty or representation is made as to this product's ability to protect user from severe injury or death. SuperATV® urges operators and occupants to wear a helmet and appropriate riding gear at all times.

By purchasing and installing SuperATV® products, user agrees that should damages occur, SuperATV® will not be held responsible for loss of time, use, labor fees, replacement parts, or freight charges. SuperATV®, nor any 3rd party, will not be held responsible for any direct, indirect, incidental, special, or consequential damages that result from any product purchased from SuperATV®. The total liability of seller to user for all damages, losses, and causes of action, if any, shall not exceed the total purchase price paid for the product that gave rise to the claim.

SuperATV® will warranty only parts provided by SuperATV®. Any damage or problems with OEM housings, bearings, seals, or other manufacturers' products will not be covered by SuperATV®. SuperATV® parts and products are not warrantied if item was not installed properly, misused, or modified.

Installing, adding, modifying, or fabricating any factory or aftermarket product to your ATV/UTV may violate certain local, state, and federal laws. Be advised that laws vary depending on town, city, county, state, etc. Use of certain products on public streets, roads, or highways may be in violation law. The Buyer is solely and exclusively legally and personally responsible for any violation of the law by the installation or use of the product. You must abide by all local, state, and federal laws, including but not limited to vehicle safety, traffic laws, and ordinances. It is your responsibility to know the laws and how they apply to you.

The Buyer is responsible to fully understand the capability and limitations of his/her vehicle according to manufacturer specifications, warnings and instructions and agrees to hold SuperATV® harmless from any damage resulting from failure to adhere to such specifications, warnings and/ or instructions. The Buyer is also responsible to obey all applicable federal, state, and local laws and ordinances when operating his/her vehicle while using this product, and the Buyer agrees to hold SuperATV® harmless from any violation thereof.

(kit contents continued)

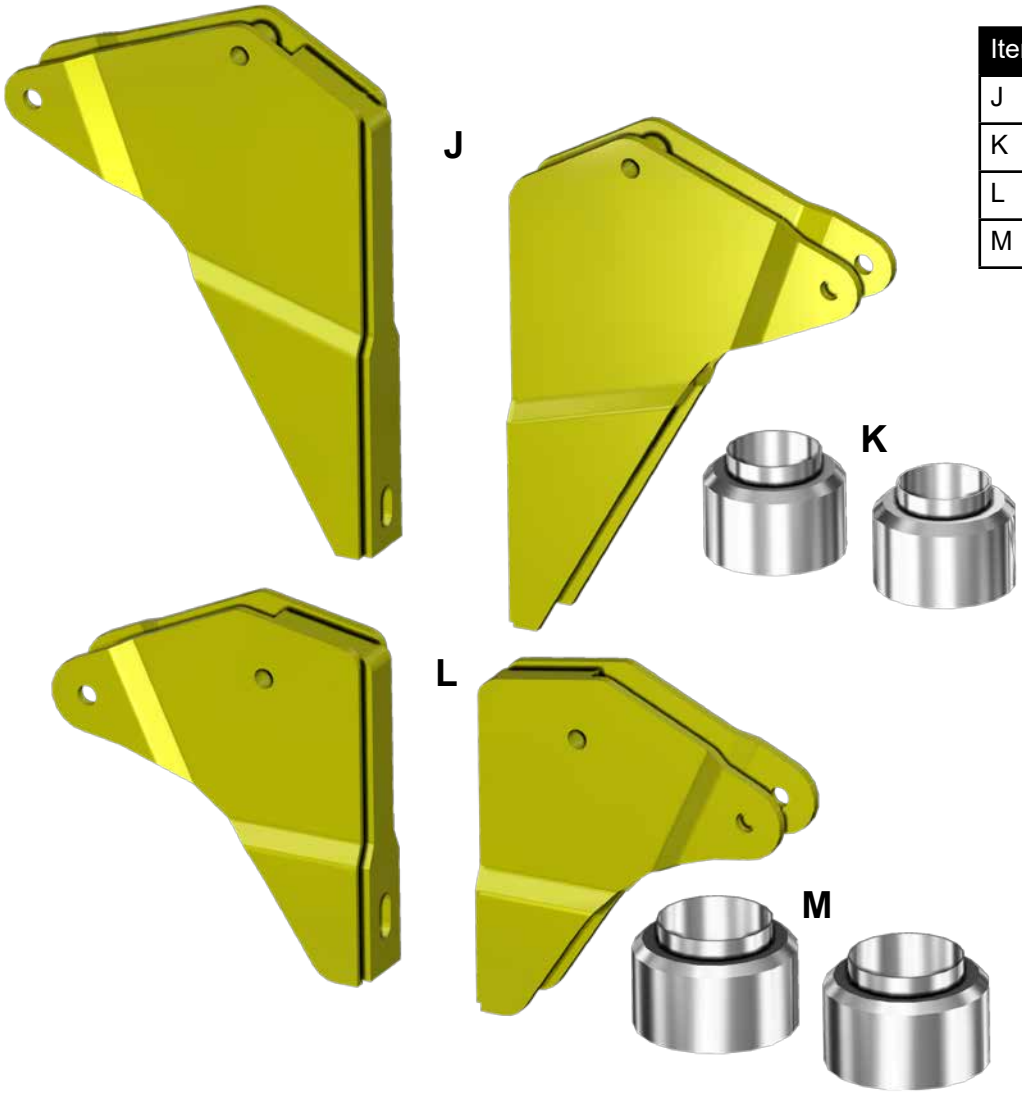

Item	Description
J	Front Bracket x 2
K	Front Spring Spacer x 2
L	Rear Bracket x 2
M	Rear Spring Spacer x 2

SuperATV strongly recommends using a Spring Compressor when removing Springs from Shocks during Spring Spacer installation.

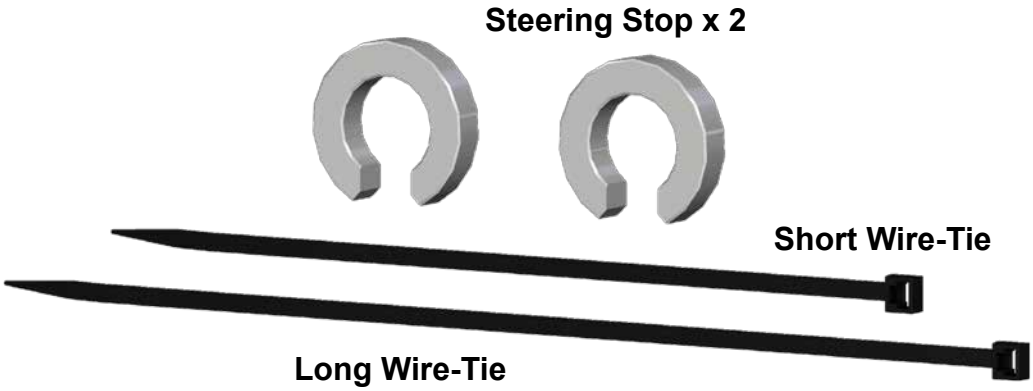

1x - Brake Line Plug

2x - T-Fitting

Front Brake Lines

Location	Length (Approx)
To Right Caliper	31”
To Left Caliper	37-1/2”
T-Fitting to Master Cylinder	37-1/2”

Rear Brake Lines

Location	Length (Approx)
To Right Caliper	45”
To Left Caliper	50-5/16”
T-Fitting to Master Cylinder	109”
	144” for MAX models

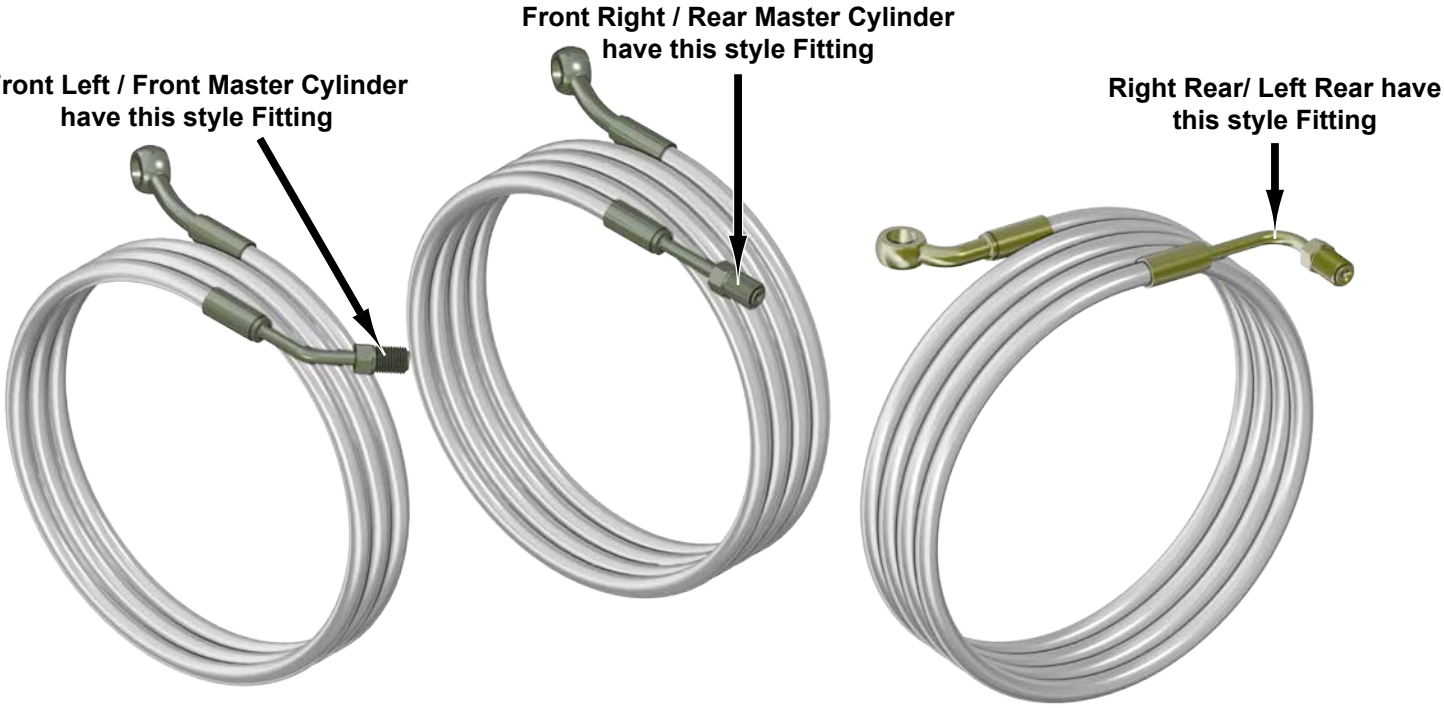

10x
Brake Line Clip and hardware

4x

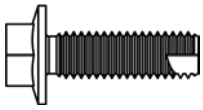

M6-1.0 x 20mm Lg. FHCS (self tapping)

2x

M6-1.0 x 25mm Lg. FHCS (self tapping)

1x

M6-1.0 Nylock Nut

Front Removal: *Keep all components removed from machine.*

- From both sides of machine, remove components shown.

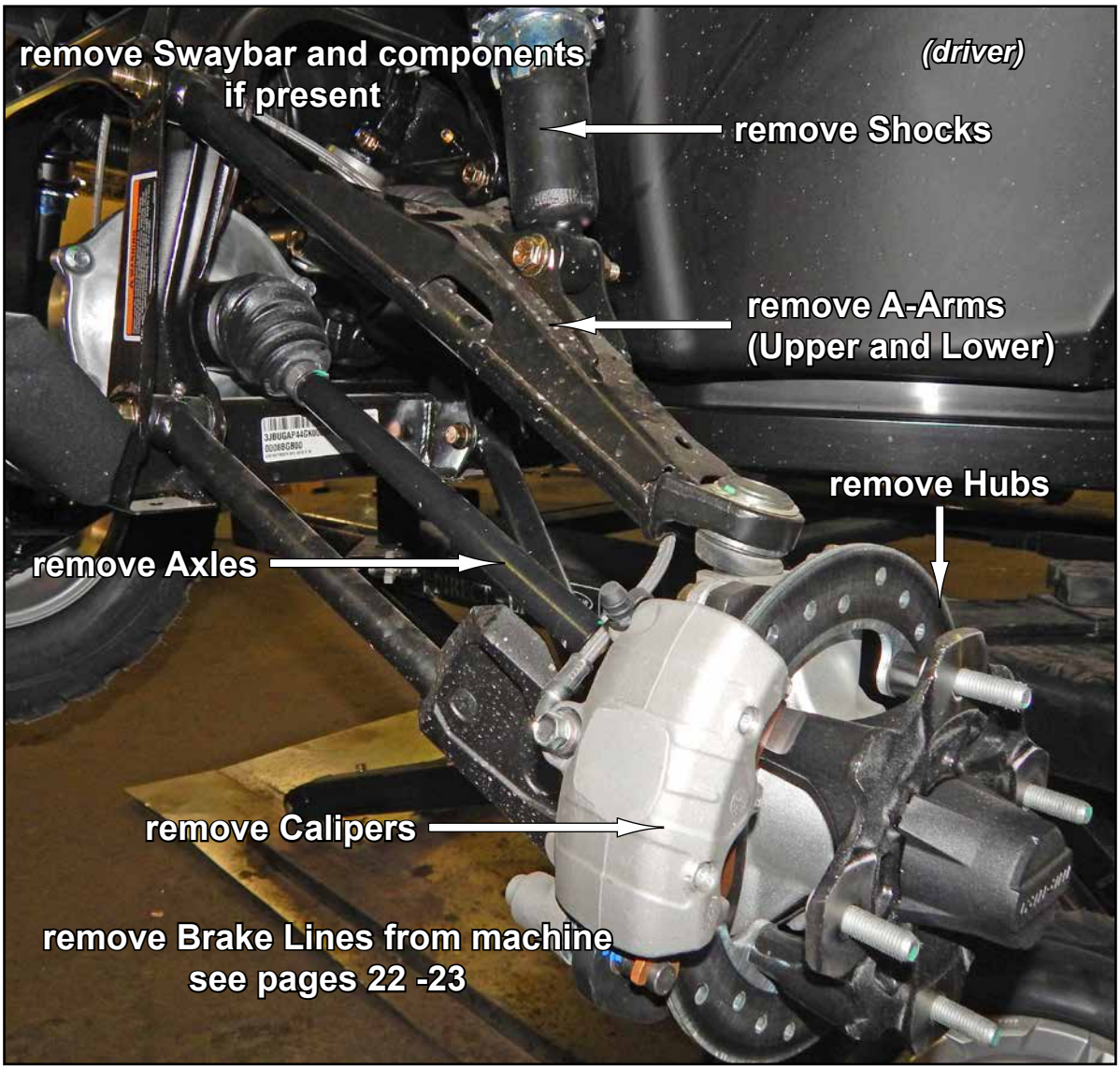

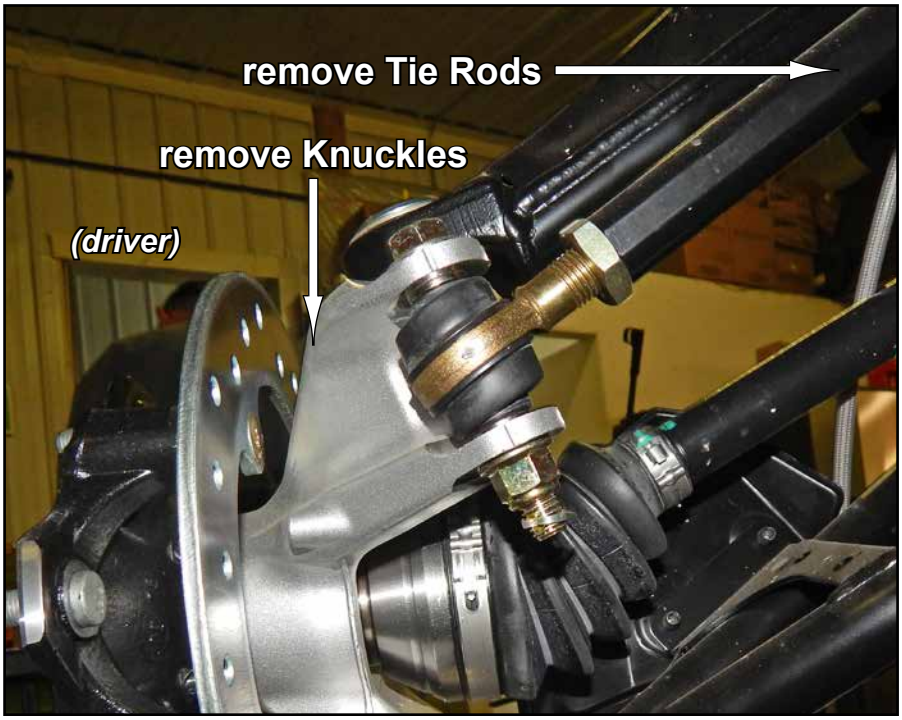

Rear Removal: *Keep all components removed from machine.*

- From both sides of machine, remove components shown.

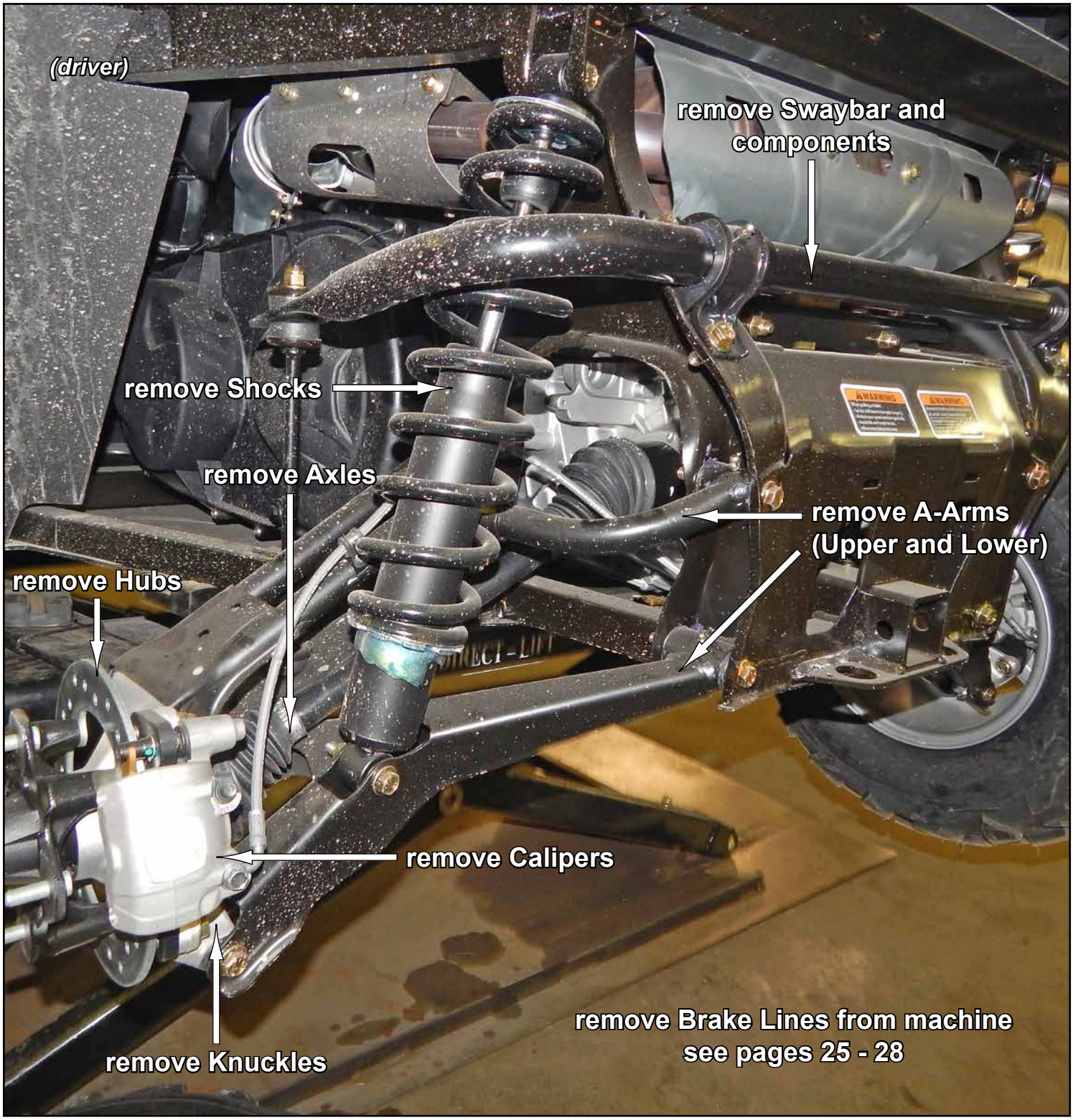

- Place Shock in Spring Compressor and remove Retainer and Spring.

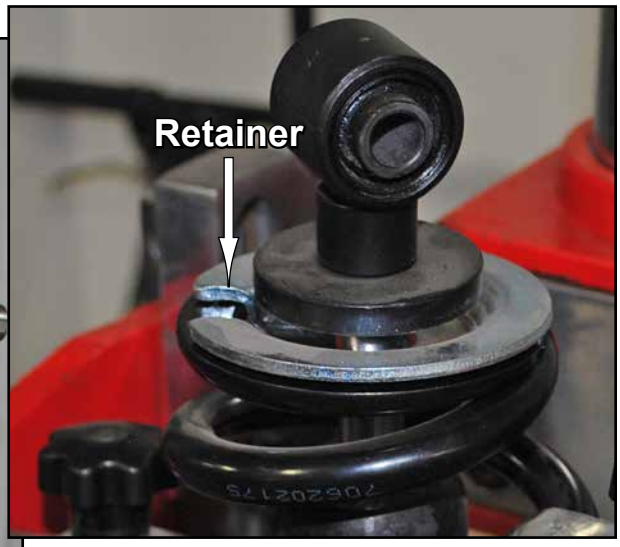

- Install appropriate Spring Spacer as shown.
- Reinstall Spring and Retainer.
- Remove Shock and repeat steps for remaining Shocks.
- Set Shocks aside.

Front

- Install Fittings into Front Arms as shown.
- Install stock Ball Joints into Front Arms.

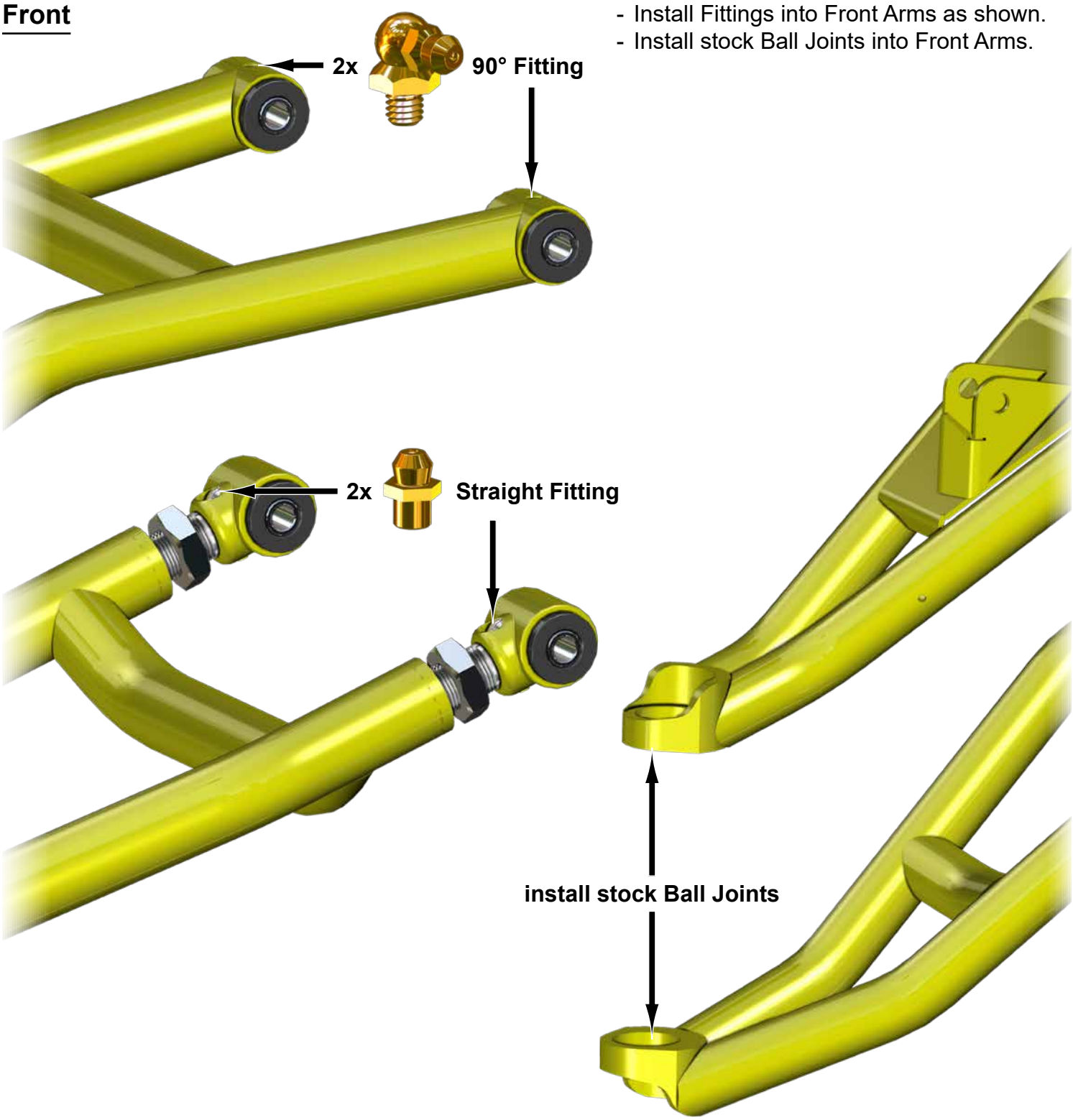

PIVOT BLOCK SETTINGS, Front

- Place new A-Arms onto a flat surface and verify dimension shown.
- *Negative 1° camber setting is achieved when Pivot Blocks are set to this dimension.*
- See last page for additional camber information.

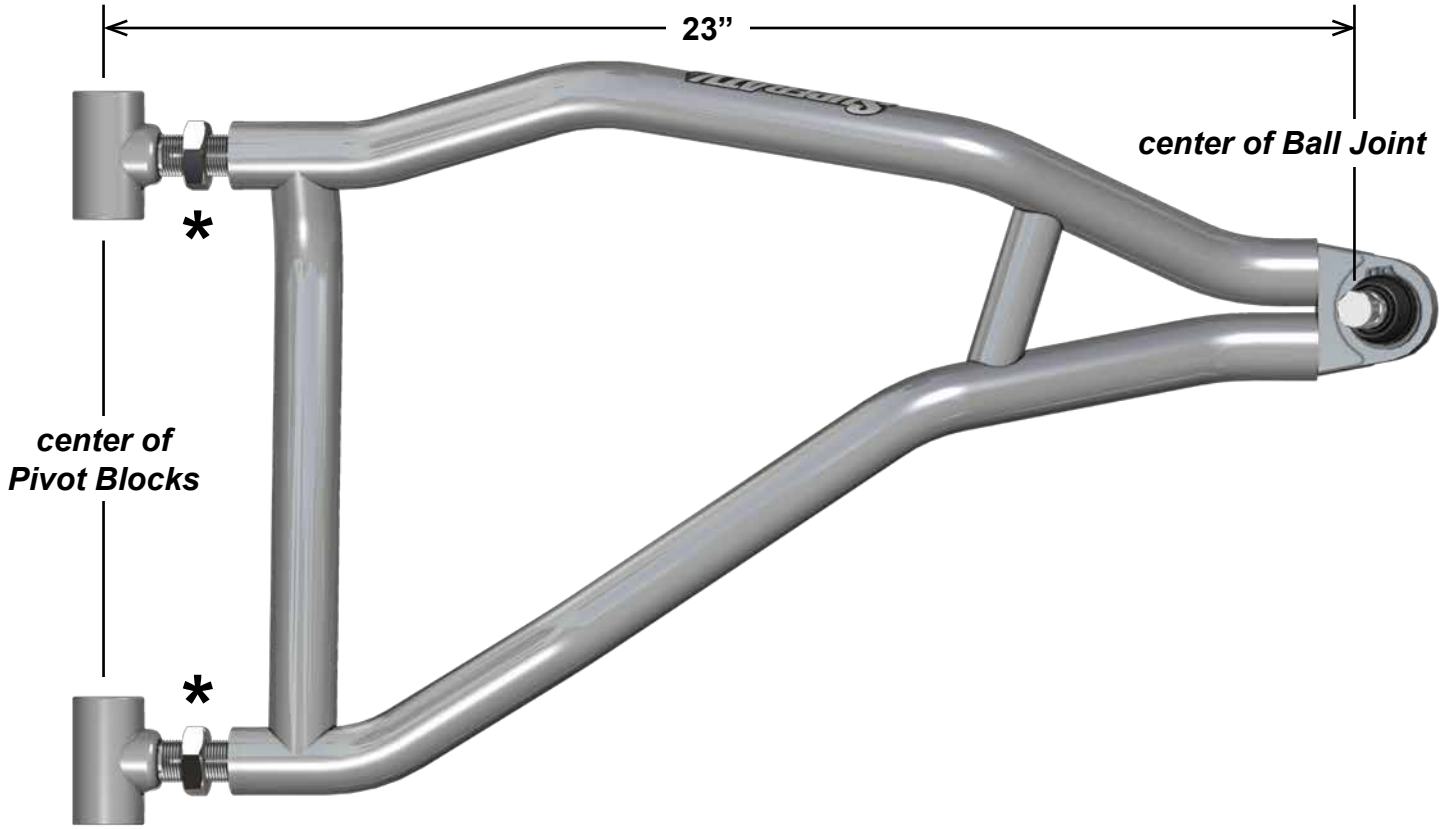

∗Leave Jam Nuts loose. Tighten after final adjustments have been made.

Front: *Do not tighten hardware completely unless noted.*

- Install Front Arms to Frame with stock hardware. ***Do not install any Nuts until all final adjustments have been completed.***

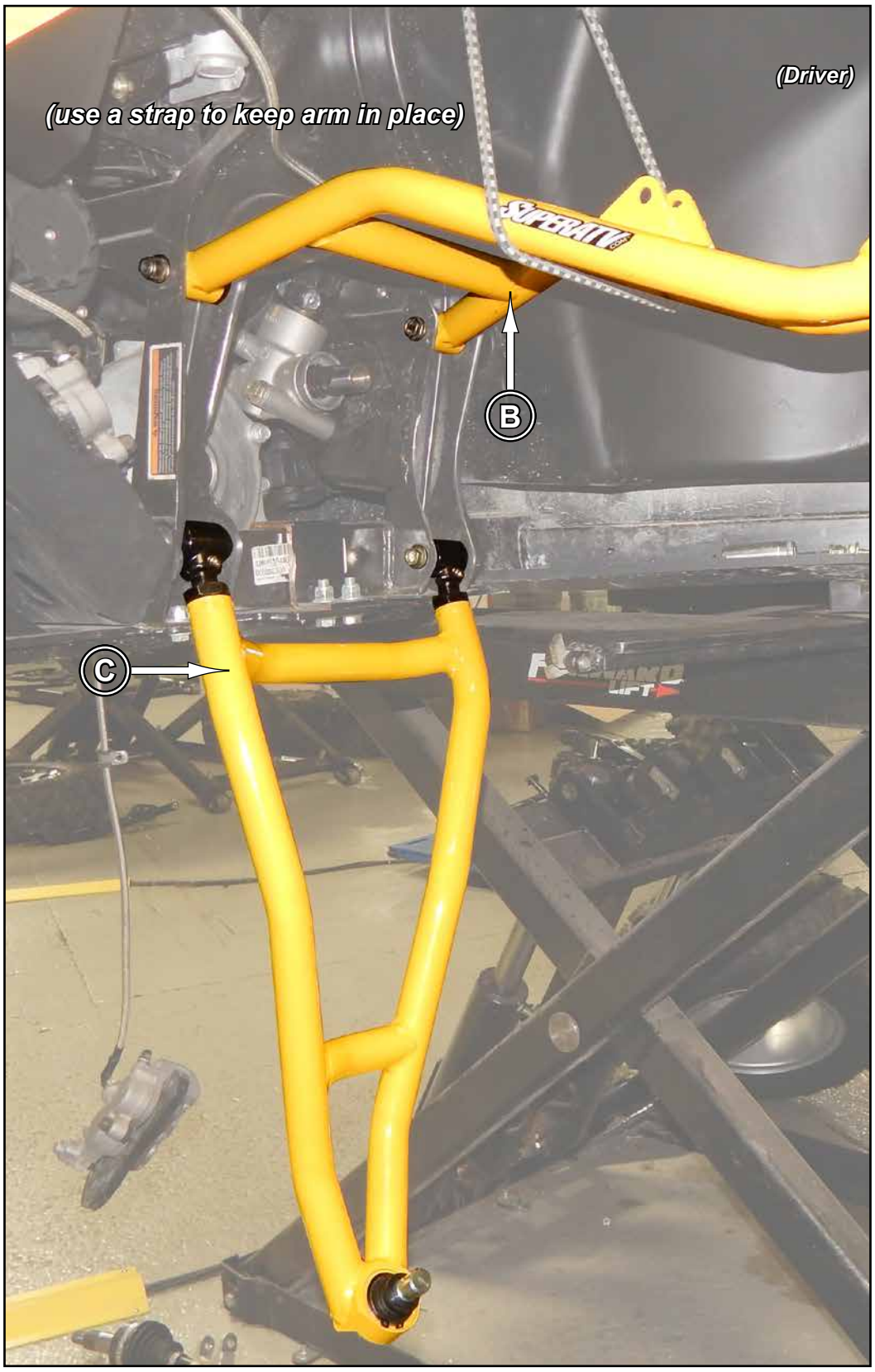

- Install Steering Stops to Rack and Pinion.
- Install new Tie Rods. ***See following page.***
- Install new Axles.

- Remove Jam Nuts from Ball and Sockets.
- Install Ball and Sockets to Rack and Pinion. Use Loctite.
- Secure Boots to Rack and Pinion and secure with Zip Ties.
- Reinstall Jam Nuts to Ball and Sockets
- Install Tie Rod Shafts to Ball and Sockets.
- Install Tie Rod Ends to Tie Rod Shafts
- Secure Tie Rod Ends to same location as stock on Spindles with hardware shown.

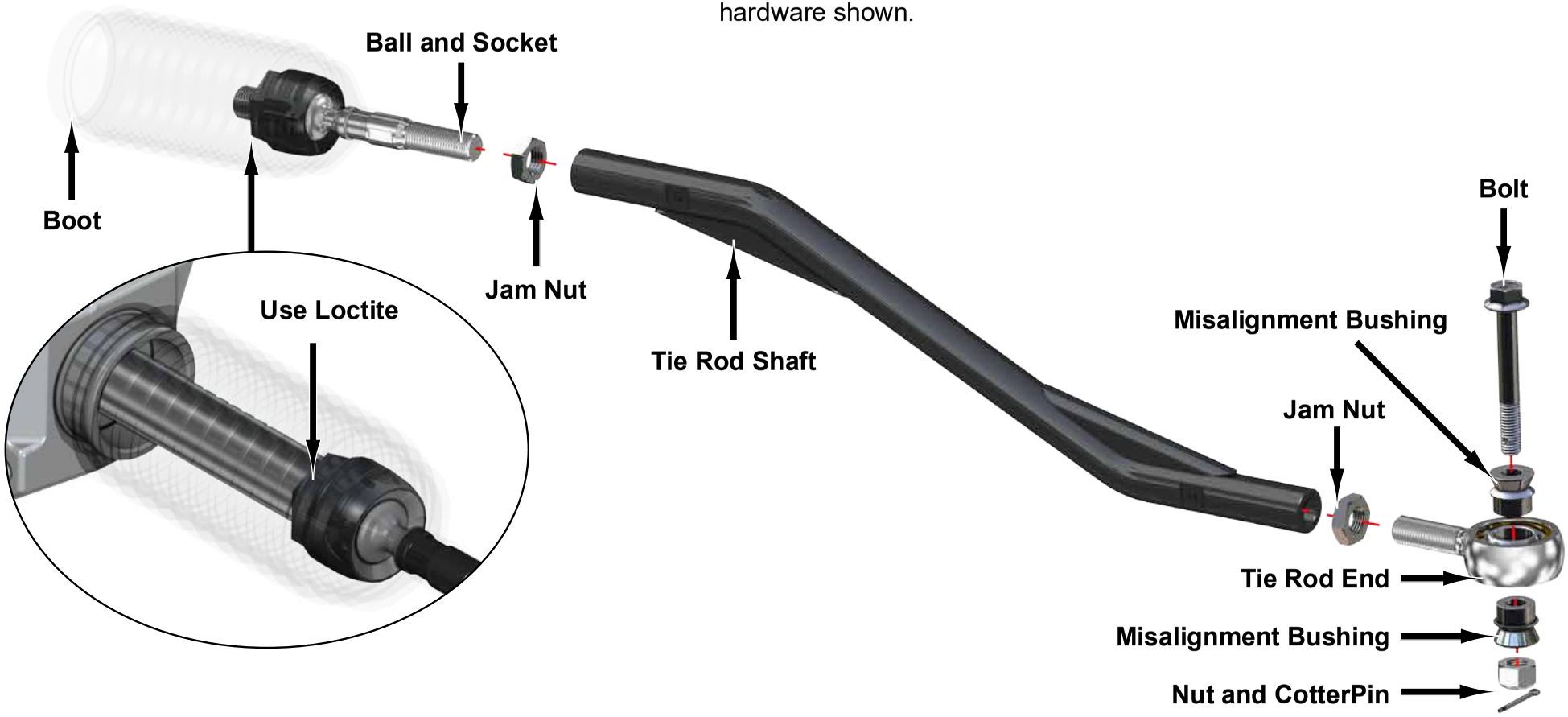

- Before initial ride, set toe-in of vehicle.
- After initial ride check to see that hardware remained tight.

- Install Front Bracket (J) to Shock Mount with stock Shock hardware and hardware shown.

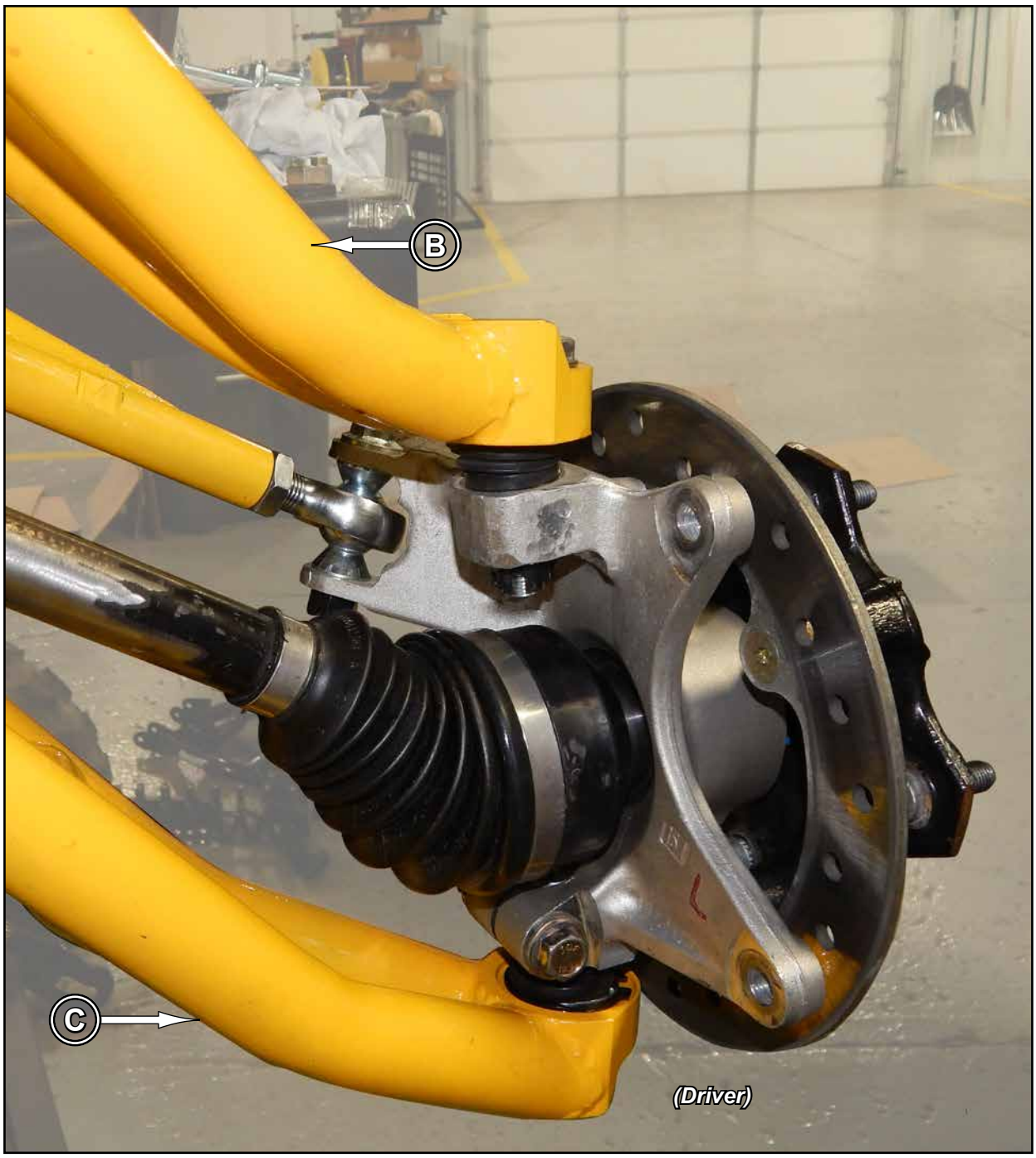

- Reinstall Hubs and Calipers. ***Do not install any Nuts until all final adjustments have been completed.***

- Install Shocks with hardware shown.

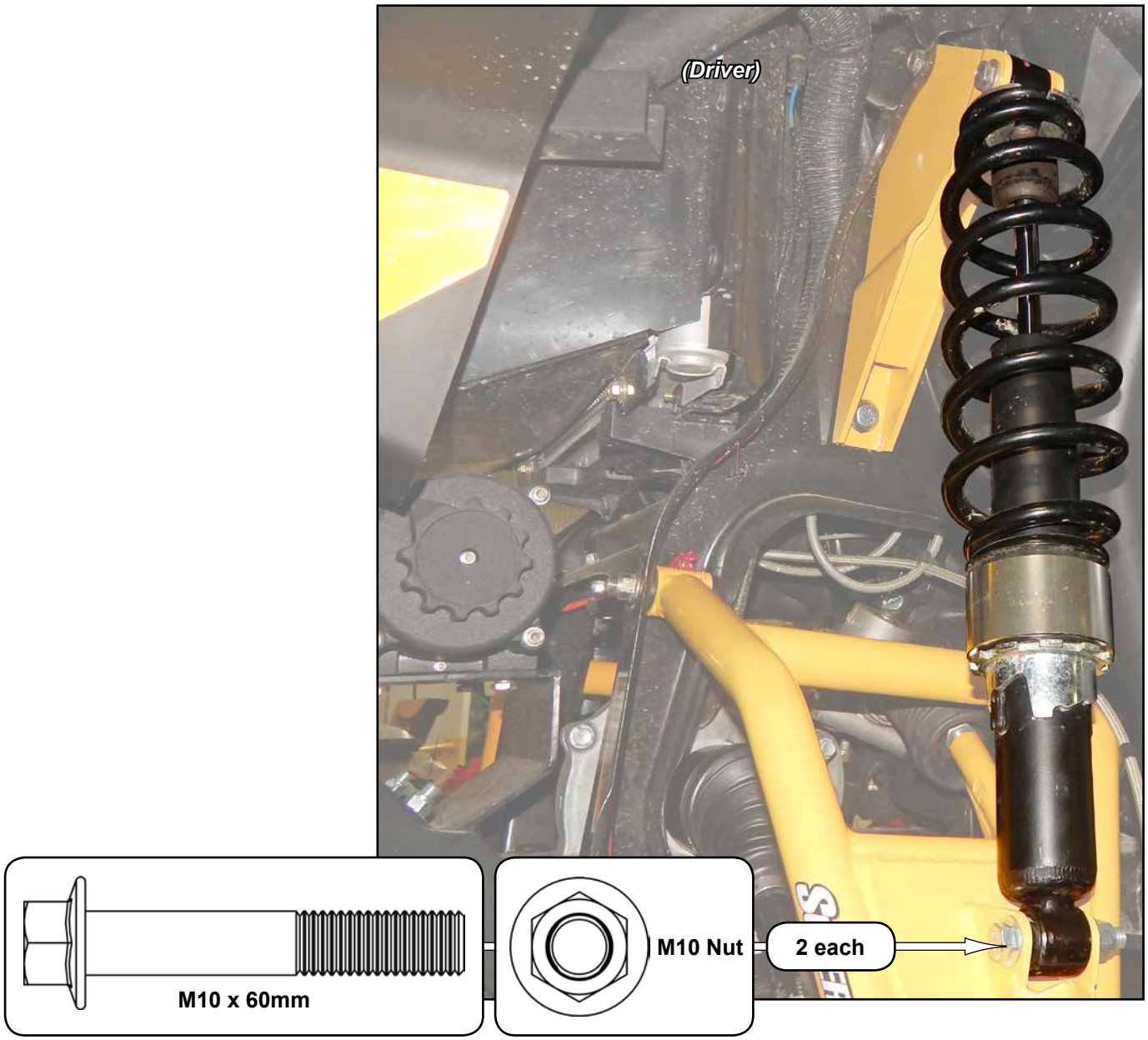

- Install new Brake Lines and secure with hardware shown. See page 24.

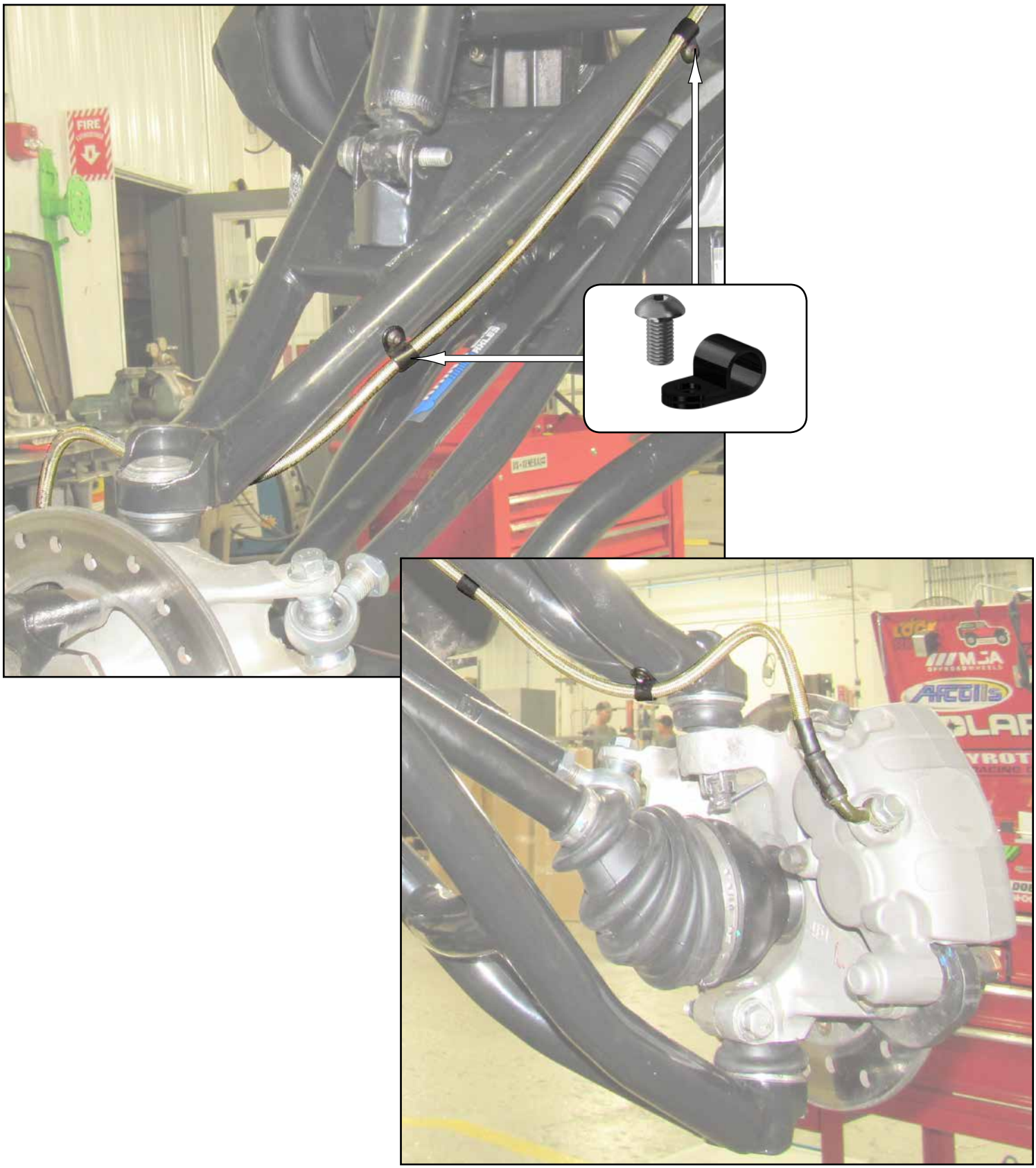

Rear

- Install Fittings into Rear Arms as shown.
- Install stock Ball Joints into Rear Arms.

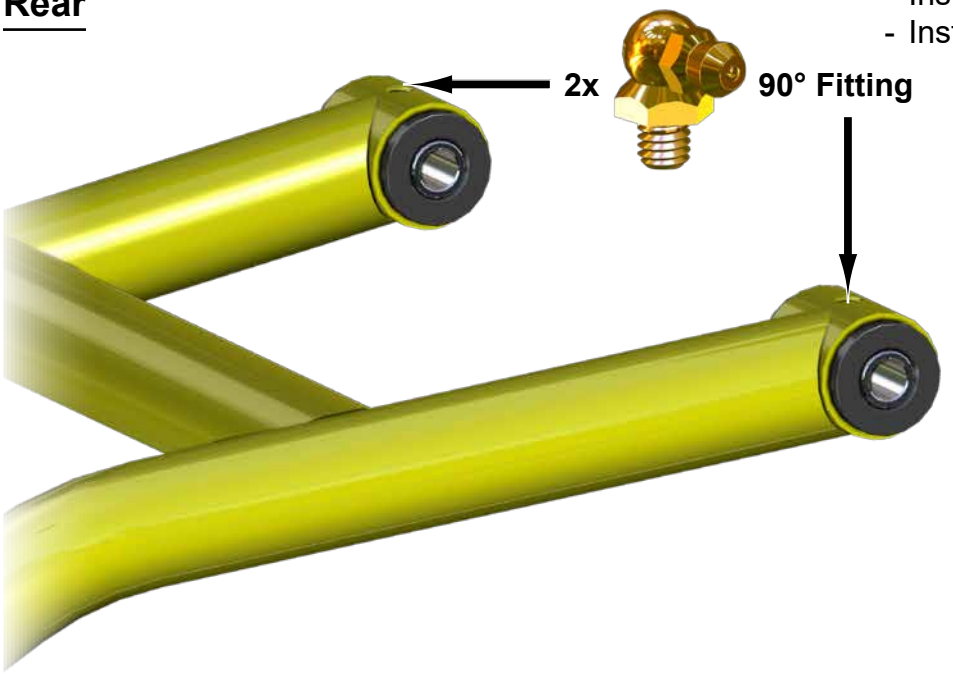

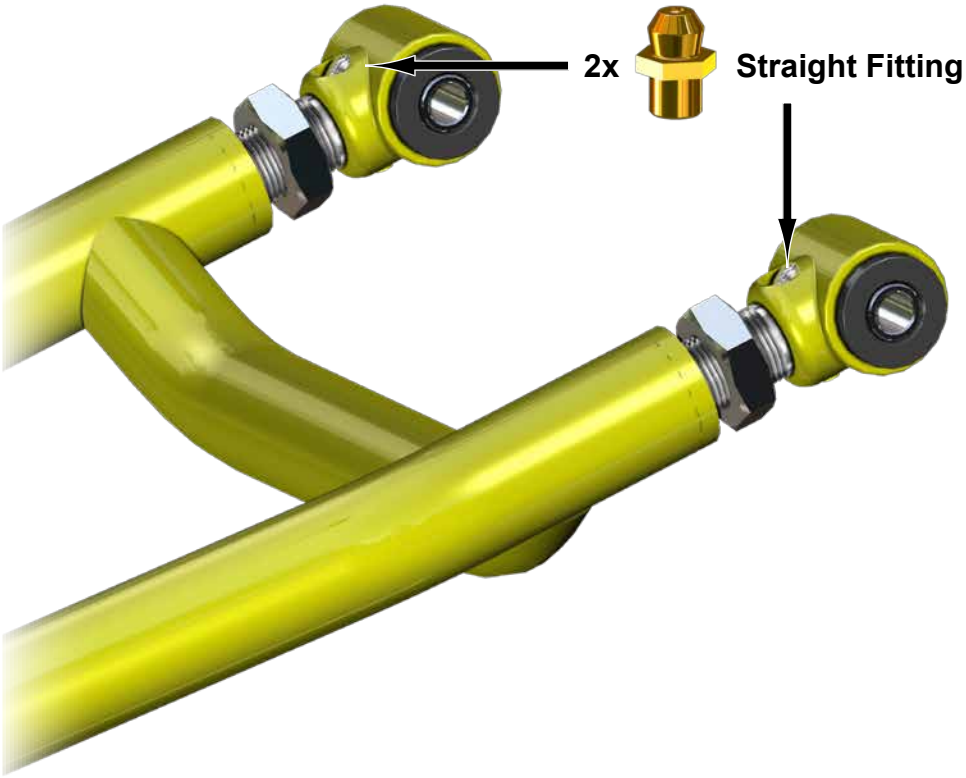

PIVOT BLOCK SETTINGS, Rear

- Place new A-Arms onto a flat surface and verify dimension shown.
- *Negative 1° camber setting is achieved when Pivot Blocks are set to this dimension.*
- See last page for additional camber information.

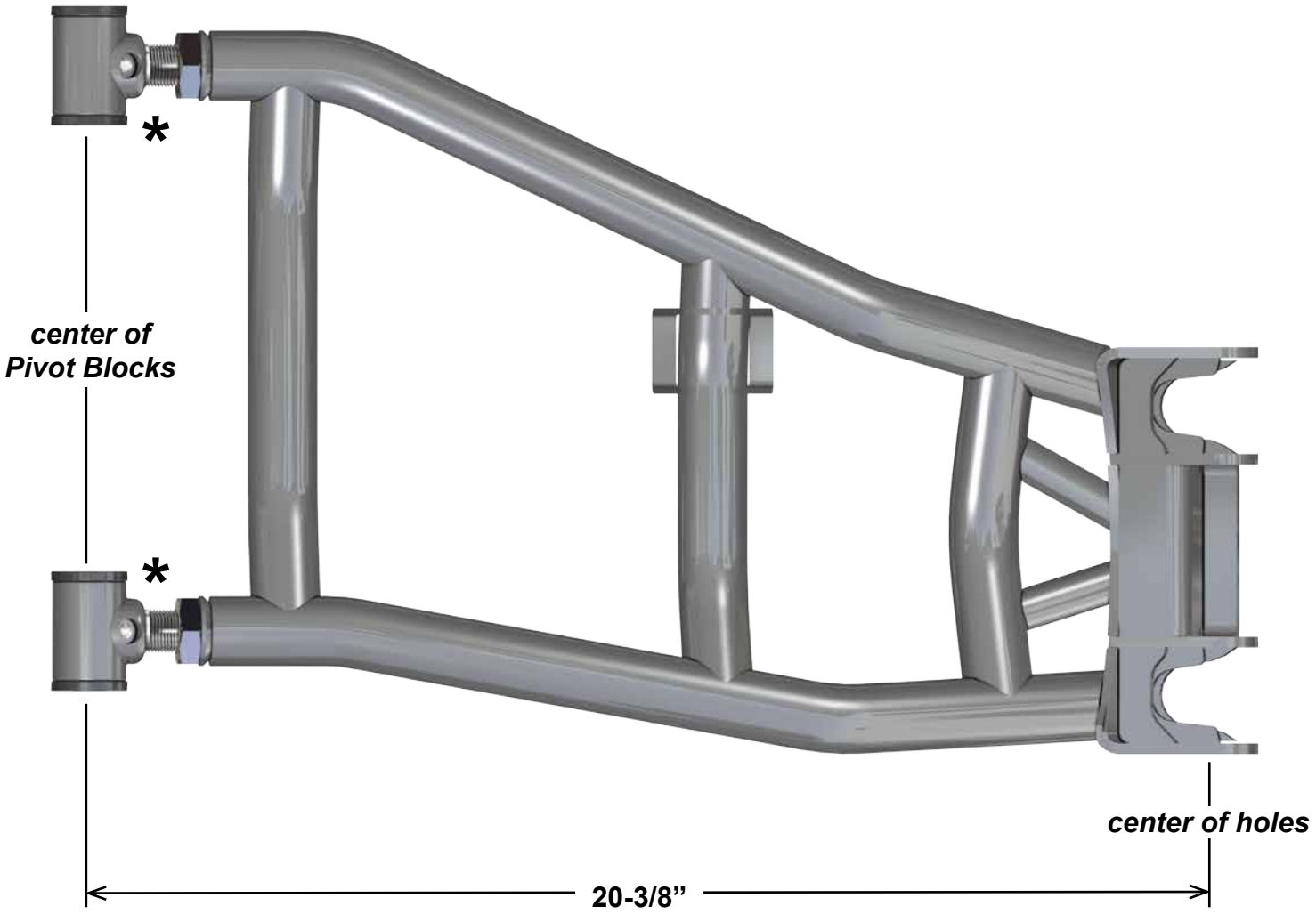

∗Leave Jam Nuts loose. Tighten after final adjustments have been made.

Rear: *Do not tighten hardware completely unless noted.*

Do not install any Nuts until all final adjustments have been completed.

- Install Rear Arms to Frame with stock hardware.
- Install new Axles.
- Install Knuckles to Rear Arms with stock hardware.

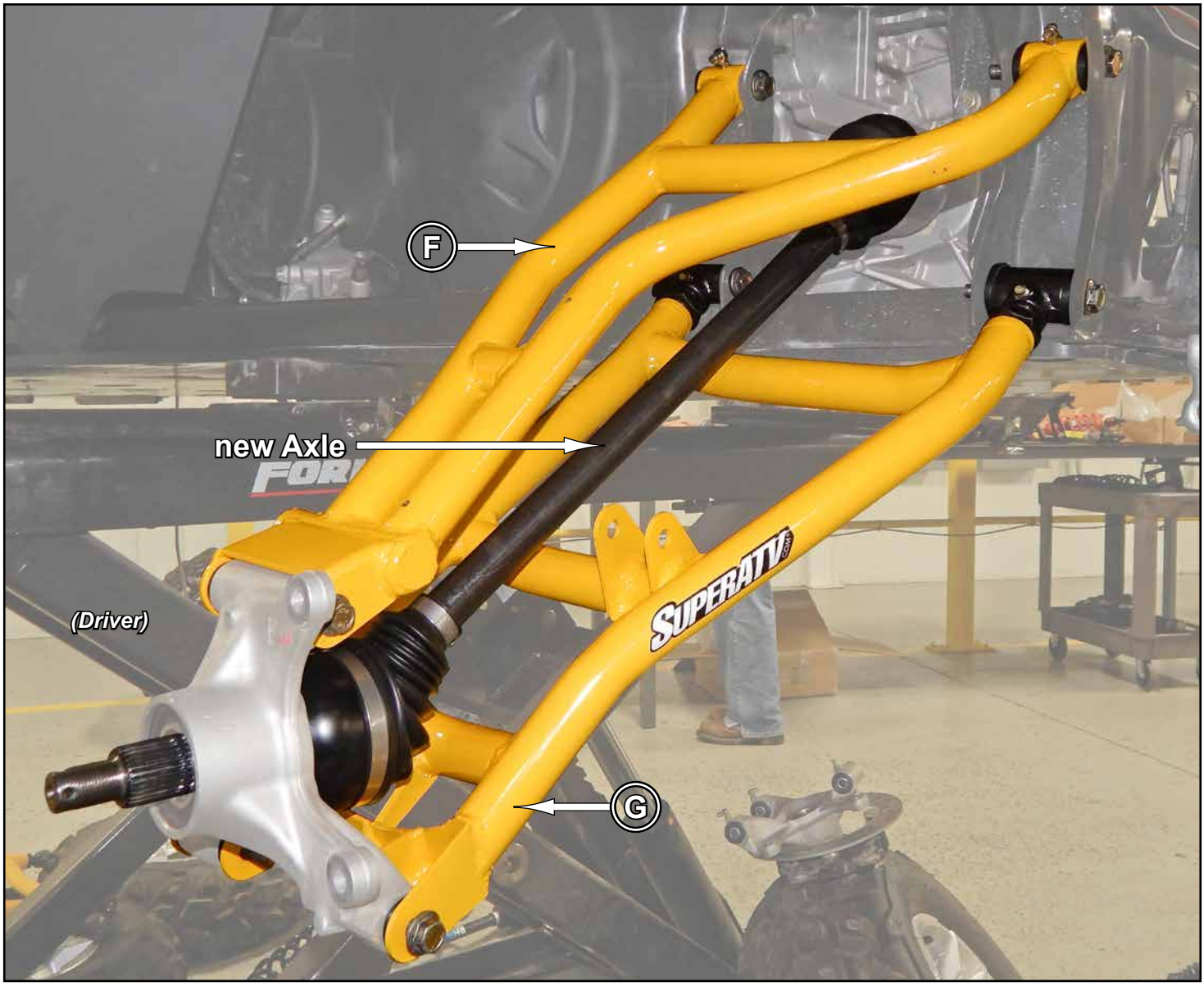

- Install Shocks with stock Shock hardware.

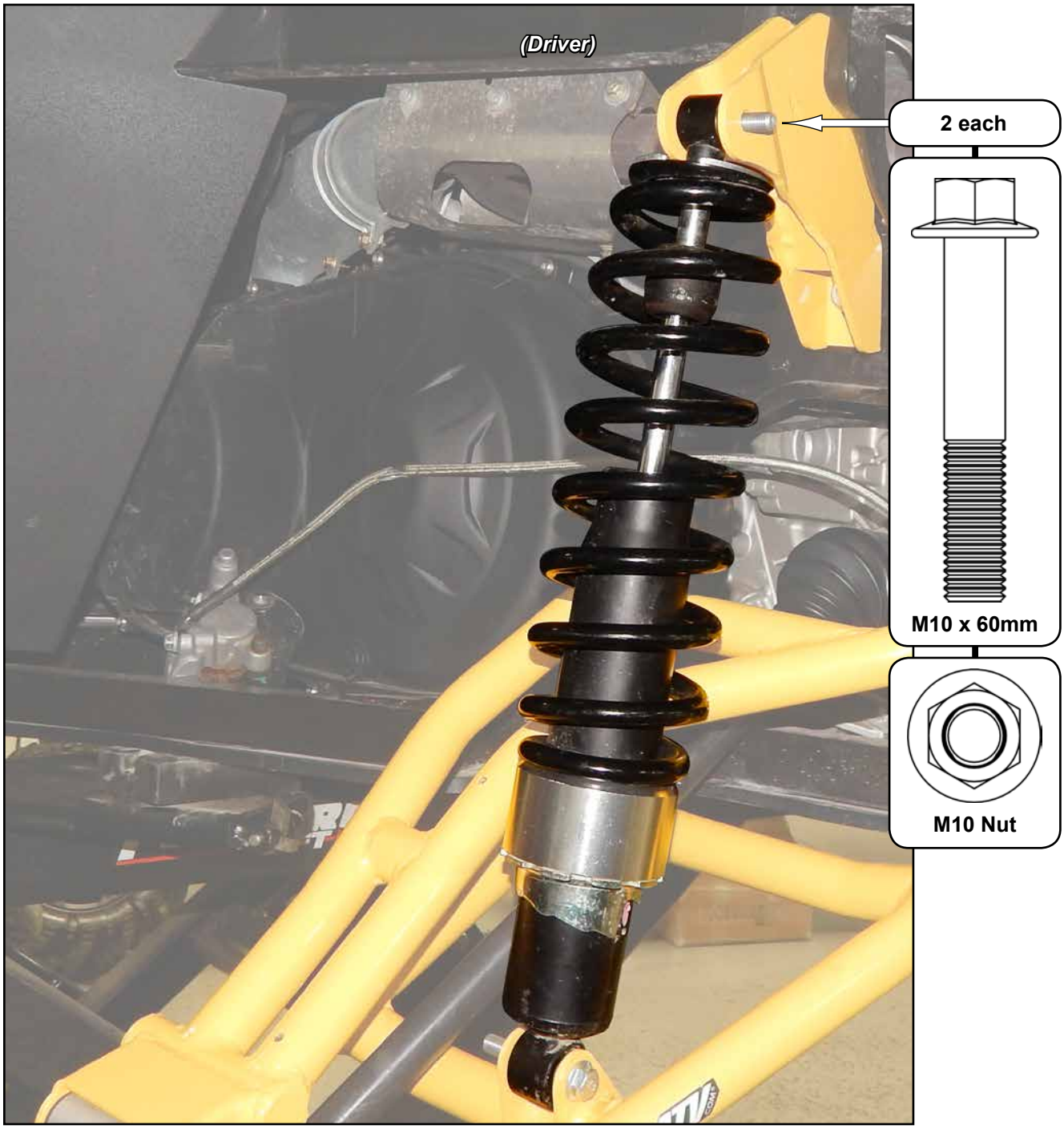

- Reinstall Hubs and Calipers. ***Do not install any Nuts until all final adjustments have been completed.***
- Install new Brake Lines and secure with hardware shown. See page 29.

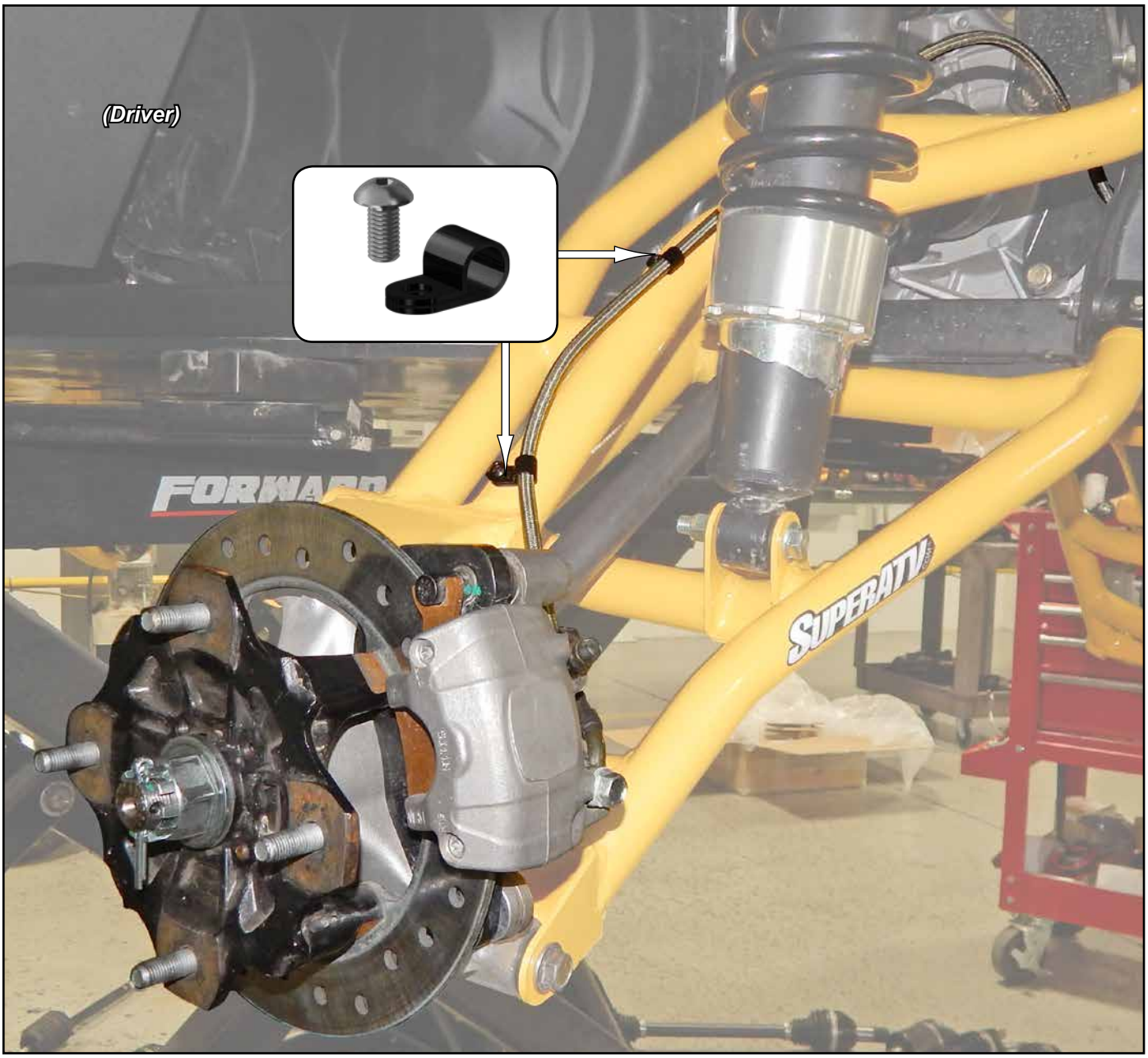

- Reinstall Tires and check Camber settings; see last page.
- Add Nuts to previously installed hardware and tighten completely. SuperATV recommends using Loc-Tite on Nuts.

Front Brake Lines:

- Remove Panel shown from Firewall.

- Disconnect Brake Lines from Master Cylinder.
- Pull Brake Lines from machine.

Front Brake Lines continued:

- Remove Rivet and disconnect T-Fitting from Frame.

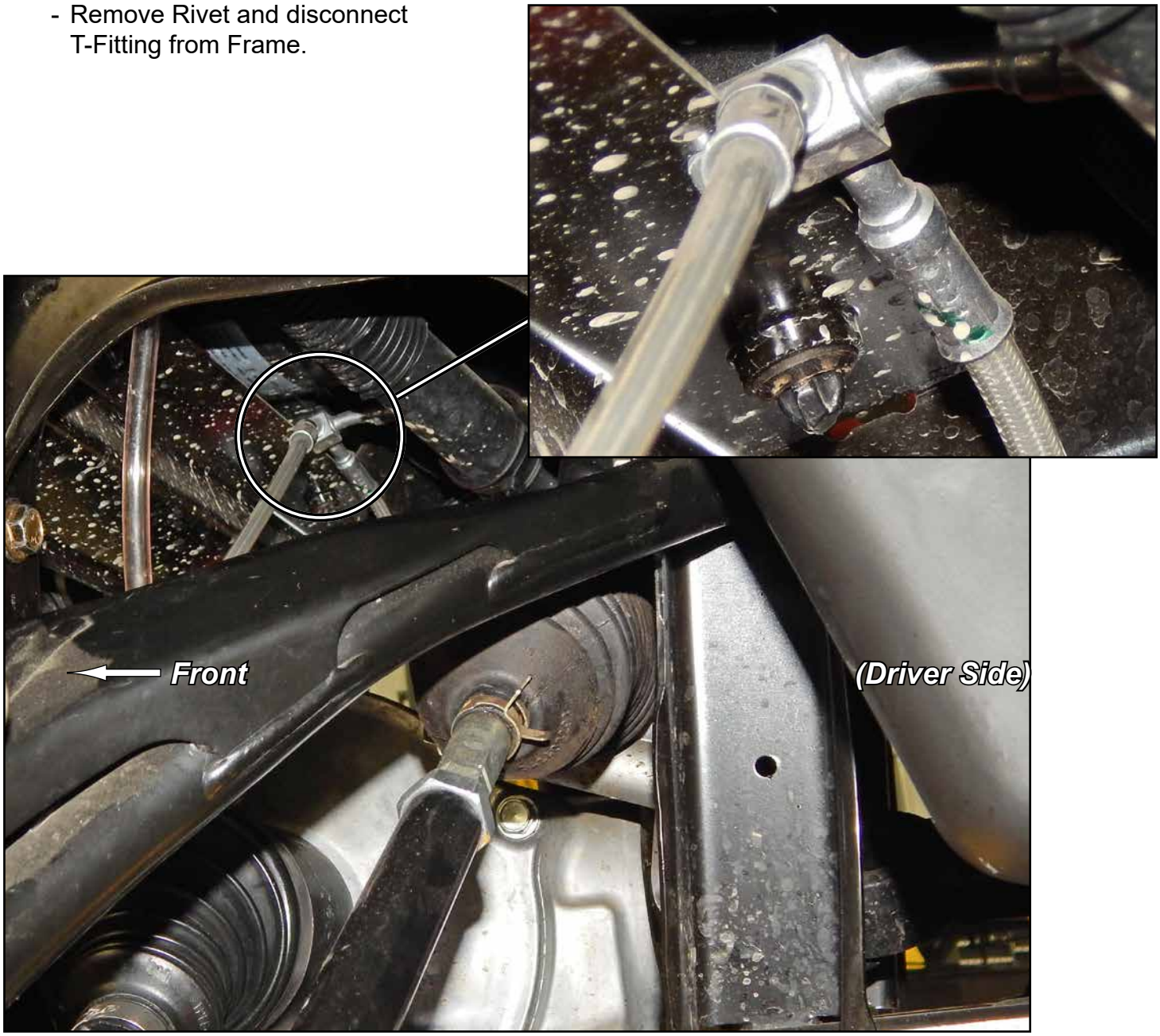

Front Brake Lines continued:

- Install Brake Lines to T-Fitting and Master Cylinder.
- Install T-Fitting to location shown; secure with hardware shown.
- Secure Brake Lines to Calipers and T-Fitting.

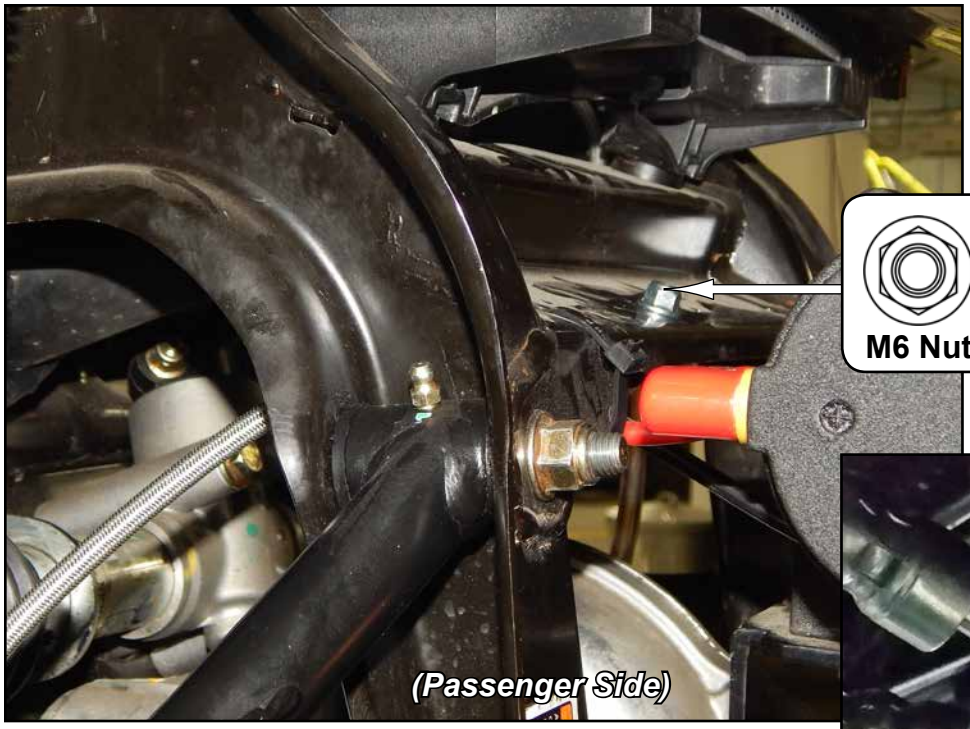

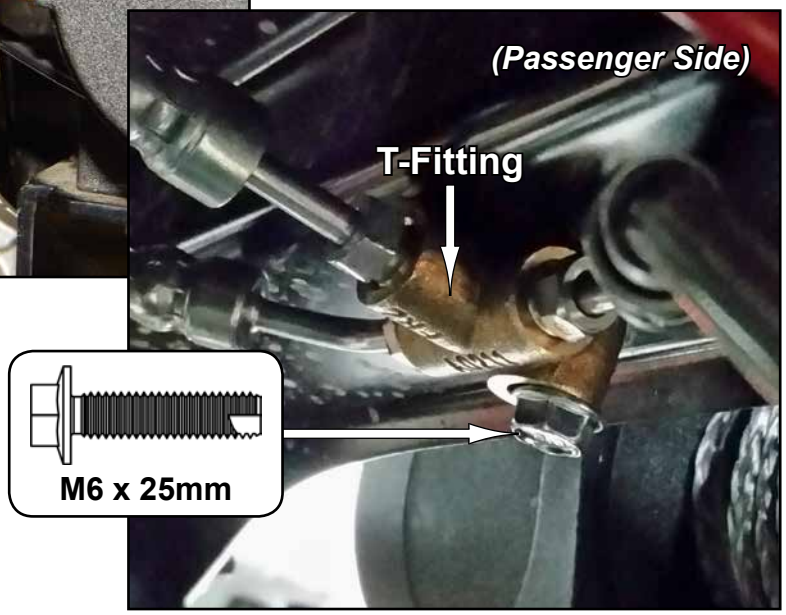

Rear Brake Lines:

- Raise Bed.

- Remove Rivets and disconnect Clips from Frame.

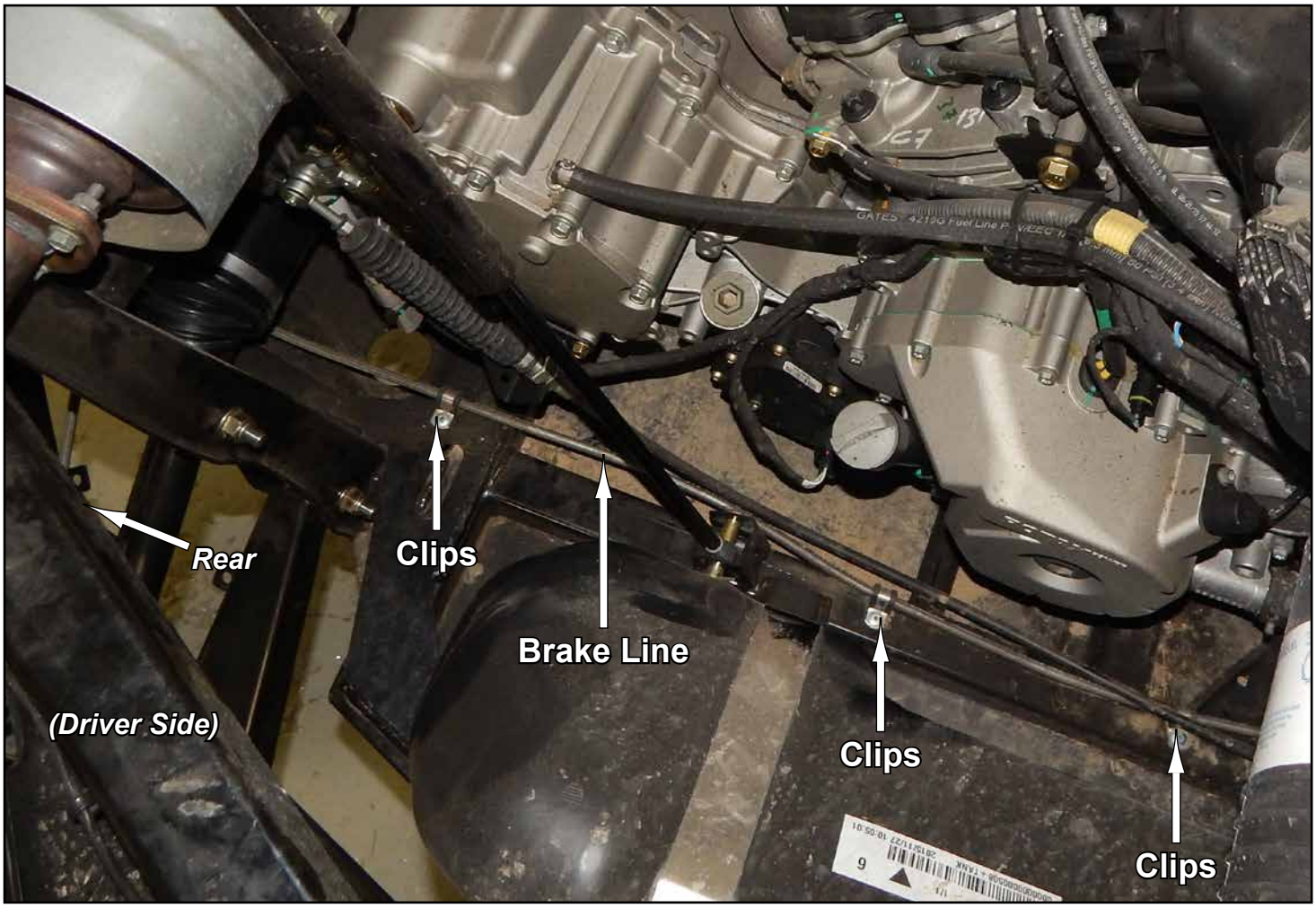

Rear Brake Lines continued:

- Remove Rivet and disconnect T-Fitting from Frame.

Rear Brake Lines continued:

- Remove Front Bulkhead Cover.

- Remove Battery Cover.

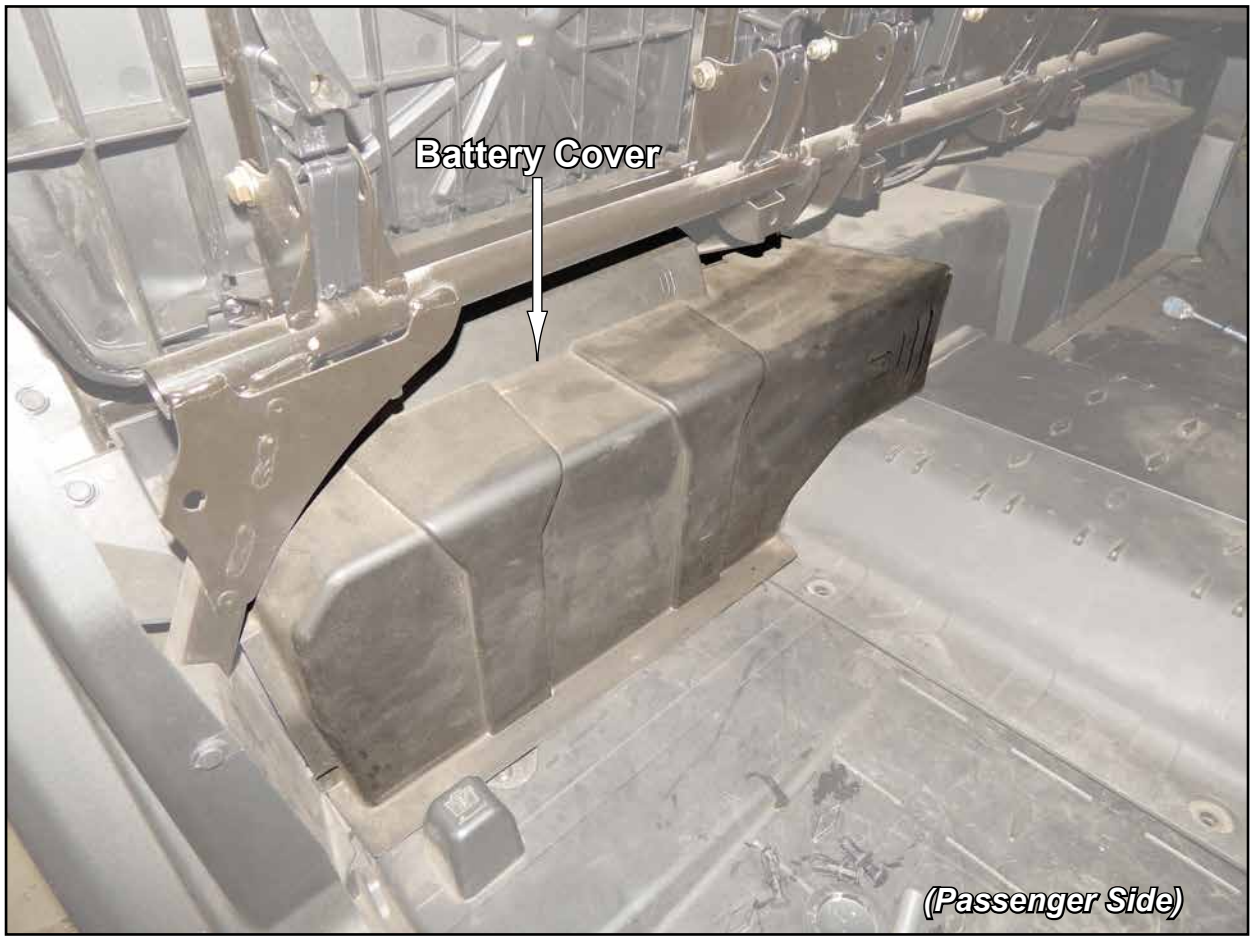

Rear Brake Lines continued:

- Remove Floor Cover.

- Unlatch Hose Supports and separate Brake Line from other components.

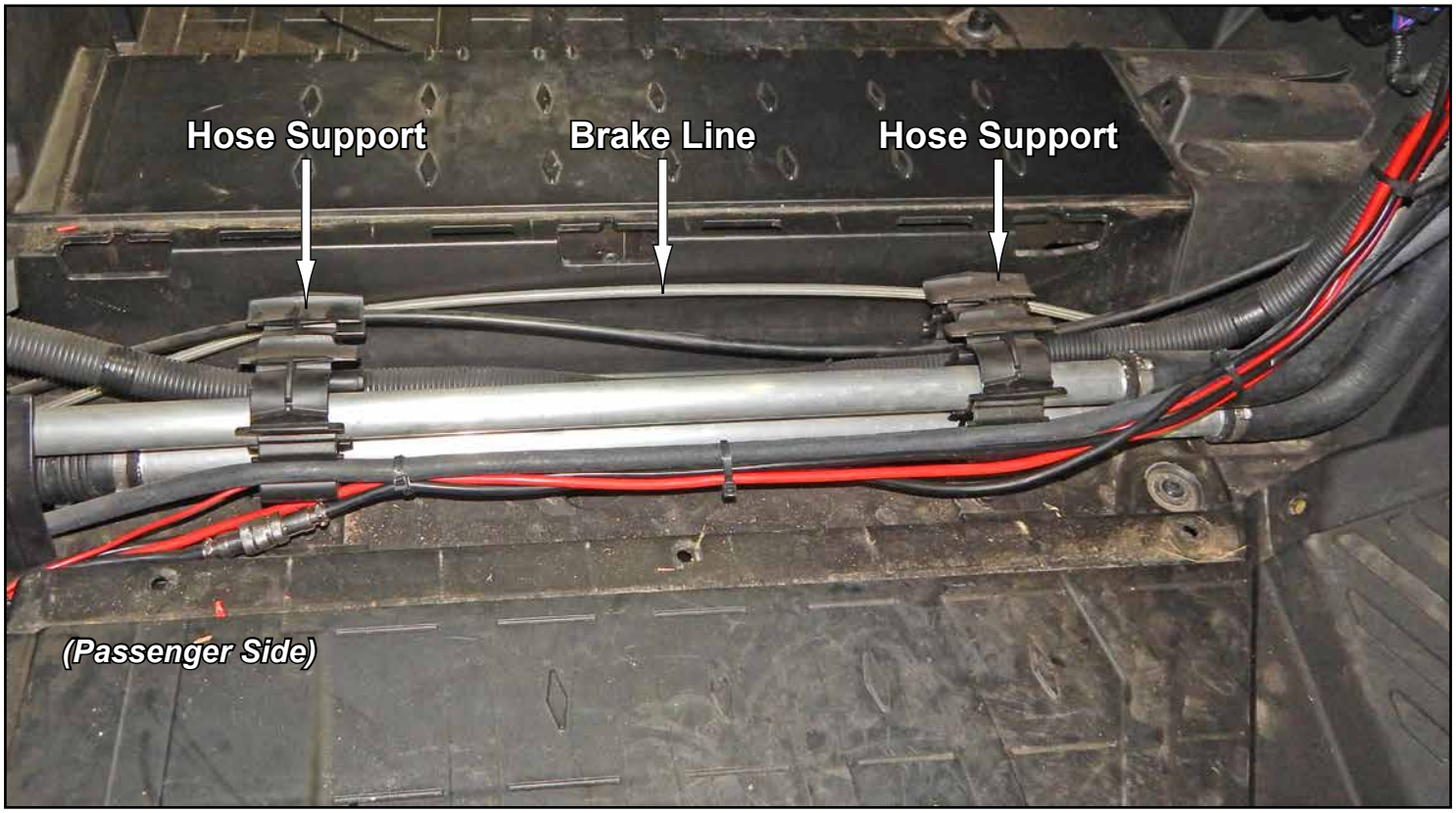

- Pull Brake Lines from machine.

Rear Brake Lines continued:

- Install Brake Lines to T-Fitting and Master Cylinder.
- Install T-Fitting to location shown; secure with hardware shown.
- Secure Rear Supply Line to stock locations with stock Brake Line Clips and hardware shown.

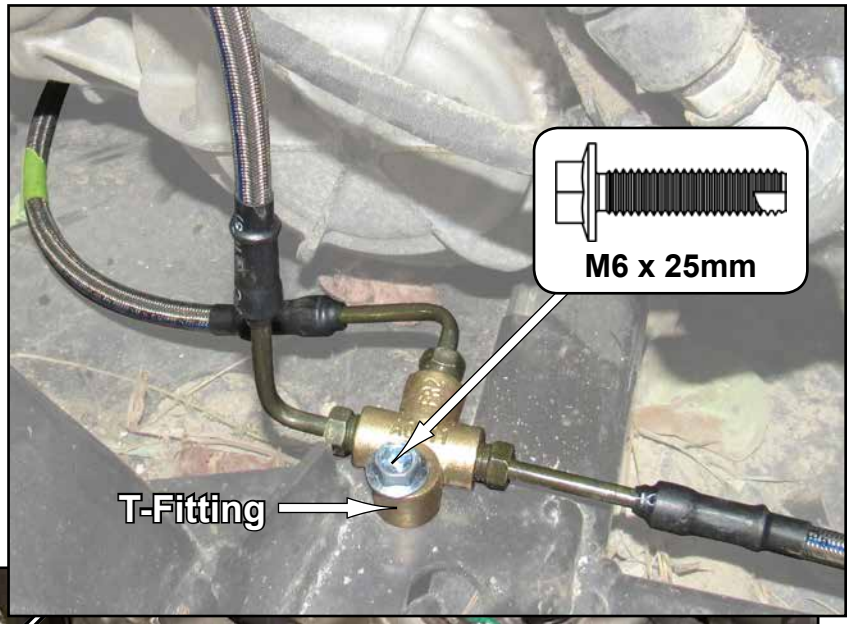

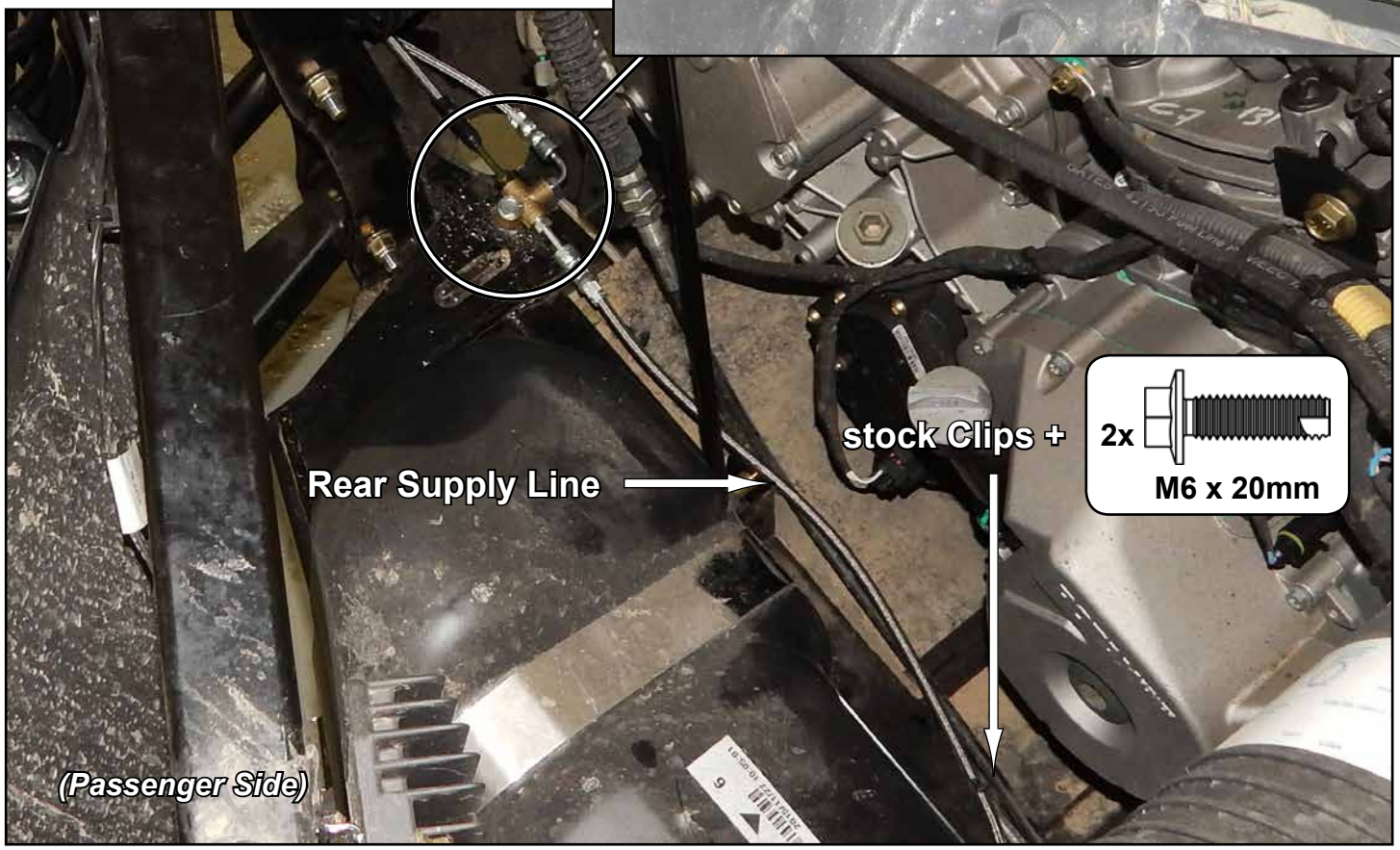

CAMBER

- **Tires must have equal air pressure before making adjustments.**
- **Adjustments to be made after all suspension components have been completely assembled.**
- **Tires must not be in contact with ground when making adjustments.**
- **Perform adjustments in small increments.**

Adjusting Camber:

- Remove A-Arms from Frame and turn Pivot Blocks to adjust camber. Reinstall Arms.
- Lower machine and settle suspension components by rolling machine back and forth several feet at a time.
- Check settings and make small adjustments as needed.
- Each time an adjustment is made, machine must be rolled back and forth to settle suspension components.
- Once desired setting is achieved, tighten hardware completely. Loc-tite on Nuts is recommended.

A NEGATIVE CAMBER SETTING OF 1° to 2° IS RECOMMENDED.

LOWER:
Too much positive camber: adjust Pivot Blocks *OUT*.
Too much negative camber: adjust Pivot Blocks *IN*.
note: 2 full turns is 1°

UPPER A-ARMS:
Too much positive camber: adjust Pivot Blocks *IN*.
Too much negative camber: adjust Pivot Blocks *OUT*.
note: 2 full turns is 1°

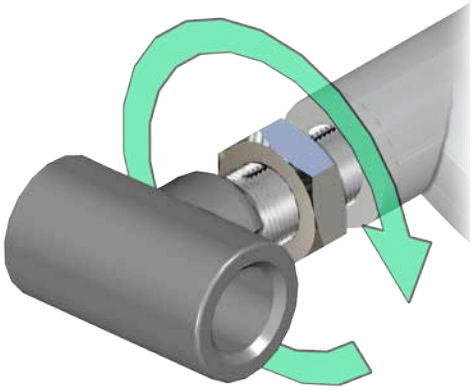

IN-Arm-Settings