2753 Michigan Road • Madison, Indiana 47250 • 855-743-3427

INSTALLATION INSTRUCTIONS

Full Doors: for Polaris Ranger XP® 900

Item	Description
A	Passenger Side Door

Item	Description
B	Driver Side Door

DOOR-P-RAN900-001 Door installation shown

DOOR-P-RAN900-001 Doors

(kit contents continue on following pages)

Need help with your installation?

sales@superatv.com

www.superatv.com

1-855-743-3427

8:00am - 8:00pm EST M-Th
8:00am - 7:00pm EST Friday
9:00am - 2:00pm EST Saturday

Read instructions and view illustrations before beginning.

Thank You For Choosing

© 2016 SuperATV.com®. All Rights Reserved.

Rev IN-DOOR-P-RAN900-001 / IN-DOOR-P-RAN900-002 2/13/2019

DOOR-P-RAN900-002 Doors

Item	Description
A	Passenger Side Door

Item	Description
B	Driver Side Door

KEYS ARE LOCATED UNDER ORANGE TAPE. DO NOT DISCARD.

(kit contents continued)

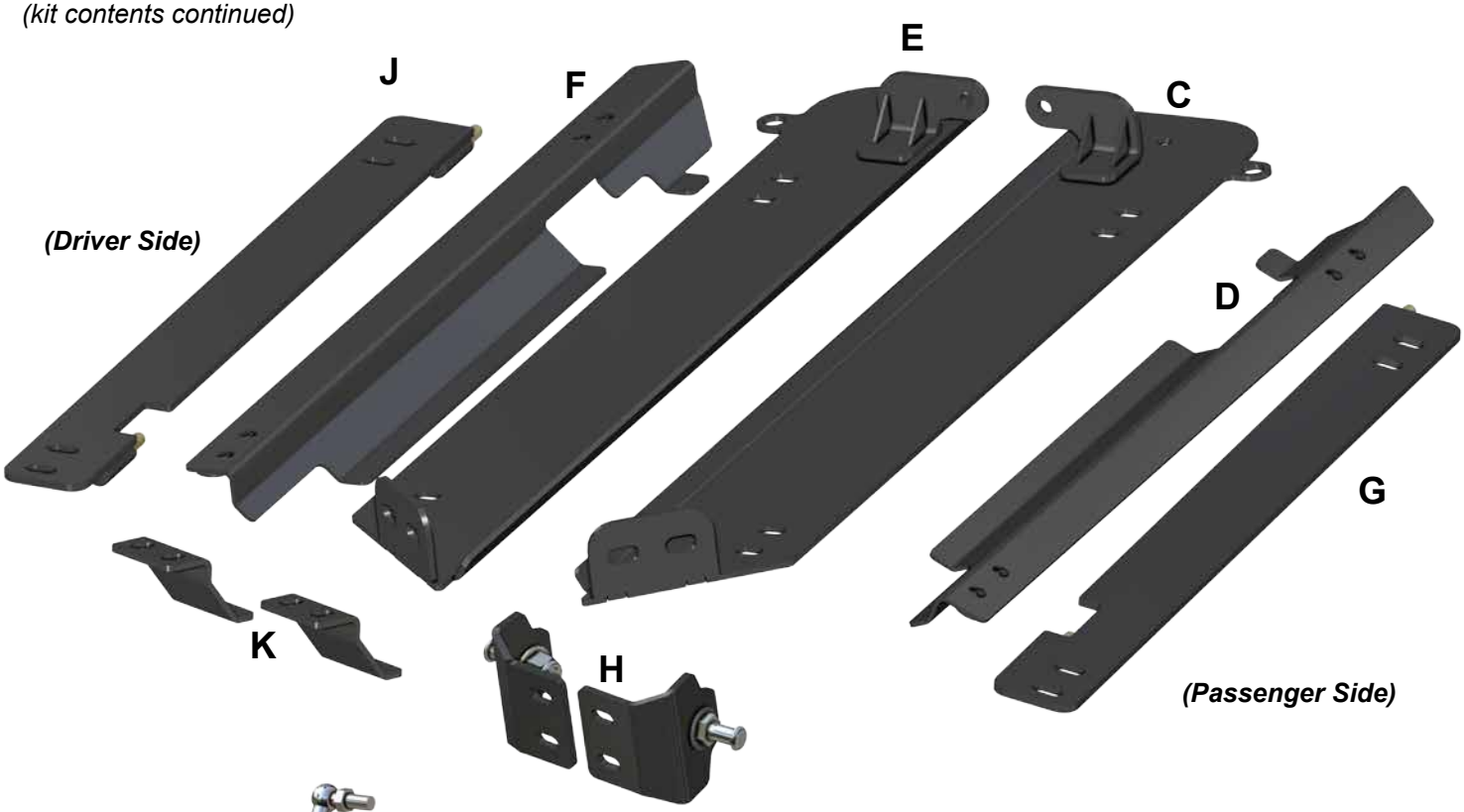

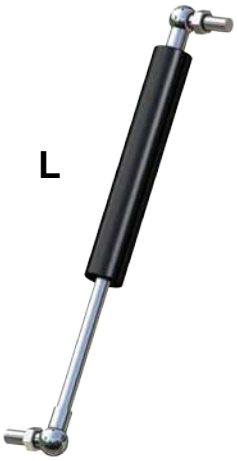

Item	Description
C	Hinge Mount; passenger
D	Rear Support; passenger
E	Hinge Mount; driver
F	Rear Support; driver
G	Male Hinge Assembly; passenger

Item	Description
H	Striker Assembly x 2
J	Male Hinge Assembly; driver
K	Strut Bracket x 2
L	Strut x 2

Gasket

(kit contents continued)

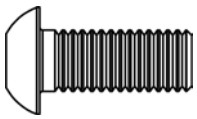

12x M8-1.25 x 20mm Lg.

4x M5-.80 x 20mm Lg.

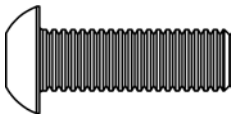

4x M8-1.25 x 25mm Lg.

4x M5-.80 Nylock Nut

8x M8-1.25 Nut

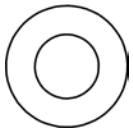

12x M8 Washer

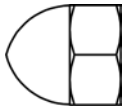

8x M8 Acorn Nut

Mirrors

Cleaning:

- Do not use a dry cloth, or your hands, to wipe off Doors; Scratching will occur.
- Do not use window cleaning fluids (Windex, 409, etc) or any solvents (gasoline, denatured alcohol, acetone, etc).
- Never use abrasive cleaners, abrasive pads, or gritty cloths.

1. Thouroughly rinse Doors to float off dirt and mud.
2. Using a soft cloth, or microfiber cloth, clean Doors with warm water and a gentle detergent. Baby shampoo or hand washing soap are recommended.
3. To prevent water spots, use a chamois and blot Doors dry.

Liability Statement

SuperATV's® products are designed to best fit user's ATV/UTV under stock conditions. Adding, modifying, or fabricating any factory or aftermarket parts will void any warranty provided by SuperATV® and is not recommended. SuperATV's® products could interfere with other aftermarket accessories. If user has aftermarket products on machine, contact SuperATV® to verify that they will work together.

Although SuperATV® has thousands of satisfied customers, user should be aware that installing lift kits, long travel, or suspension kits, tires, etc. will change the ride of machine and may increase maintenance and part wear. Operating any off-road machine while, or after, consuming alcohol and/or drugs increases risk of bodily harm or death. No warranty or representation is made as to this product's ability to protect user from severe injury or death. SuperATV® urges operators and occupants to wear a helmet and appropriate riding gear at all times.

By purchasing and installing SuperATV® products, user agrees that should damages occur, SuperATV® will not be held responsible for loss of time, use, labor fees, replacement parts, or freight charges. SuperATV®, nor any 3rd party, will not be held responsible for any direct, indirect, incidental, special, or consequential damages that result from any product purchased from SuperATV®. The total liability of seller to user for all damages, losses, and causes of action, if any, shall not exceed the total purchase price paid for the product that gave rise to the claim.

SuperATV® will warranty only parts provided by SuperATV®. Any damage or problems with OEM housings, bearings, seals, or other manufacturers' products will not be covered by SuperATV®. SuperATV® parts and products are not warrantied if item was not installed properly, misused, or modified.

Installing, adding, modifying, or fabricating any factory or aftermarket product to your ATV/UTV may violate certain local, state, and federal laws. Be advised that laws vary depending on town, city, county, state, etc. Use of certain products on public streets, roads, or highways may be in violation law. The Buyer is solely and exclusively legally and personally responsible for any violation of the law by the installation or use of the product. You must abide by all local, state, and federal laws, including but not limited to vehicle safety, traffic laws, and ordinances. It is your responsibility to know the laws and how they apply to you.

The Buyer is responsible to fully understand the capability and limitations of his/her vehicle according to manufacturer specifications, warnings and instructions and agrees to hold SuperATV® harmless from any damage resulting from failure to adhere to such specifications, warnings and/ or instructions. The Buyer is also responsible to obey all applicable federal, state, and local laws and ordinances when operating his/her vehicle while using this product, and the Buyer agrees to hold SuperATV® harmless from any violation thereof.

Remove Side Nets and hardware shown from both sides of machine

keep all components removed from machine

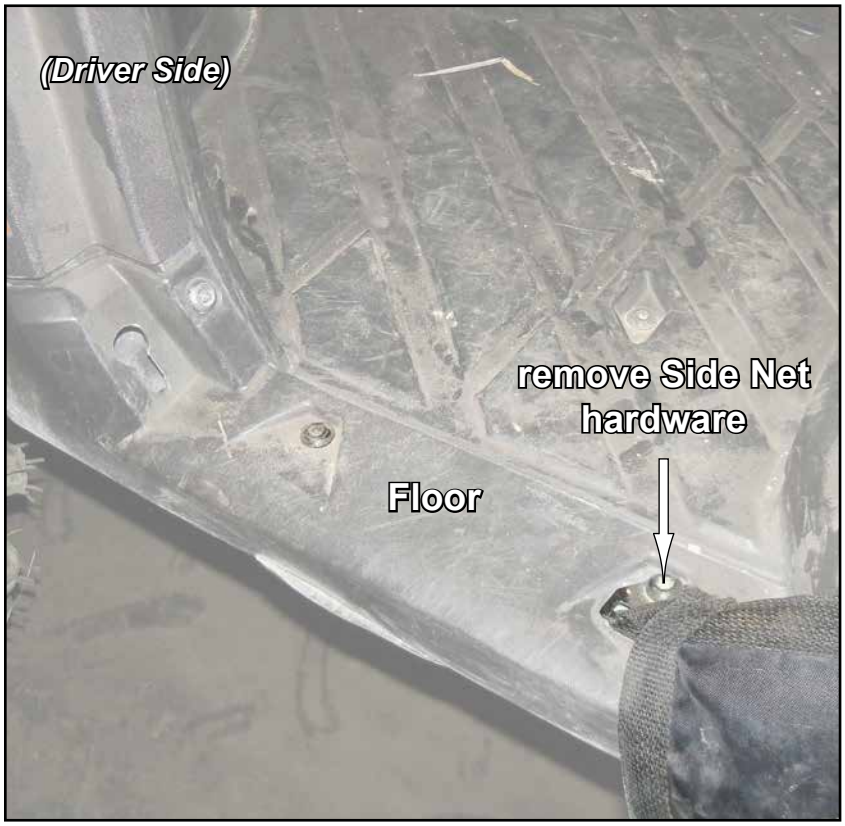

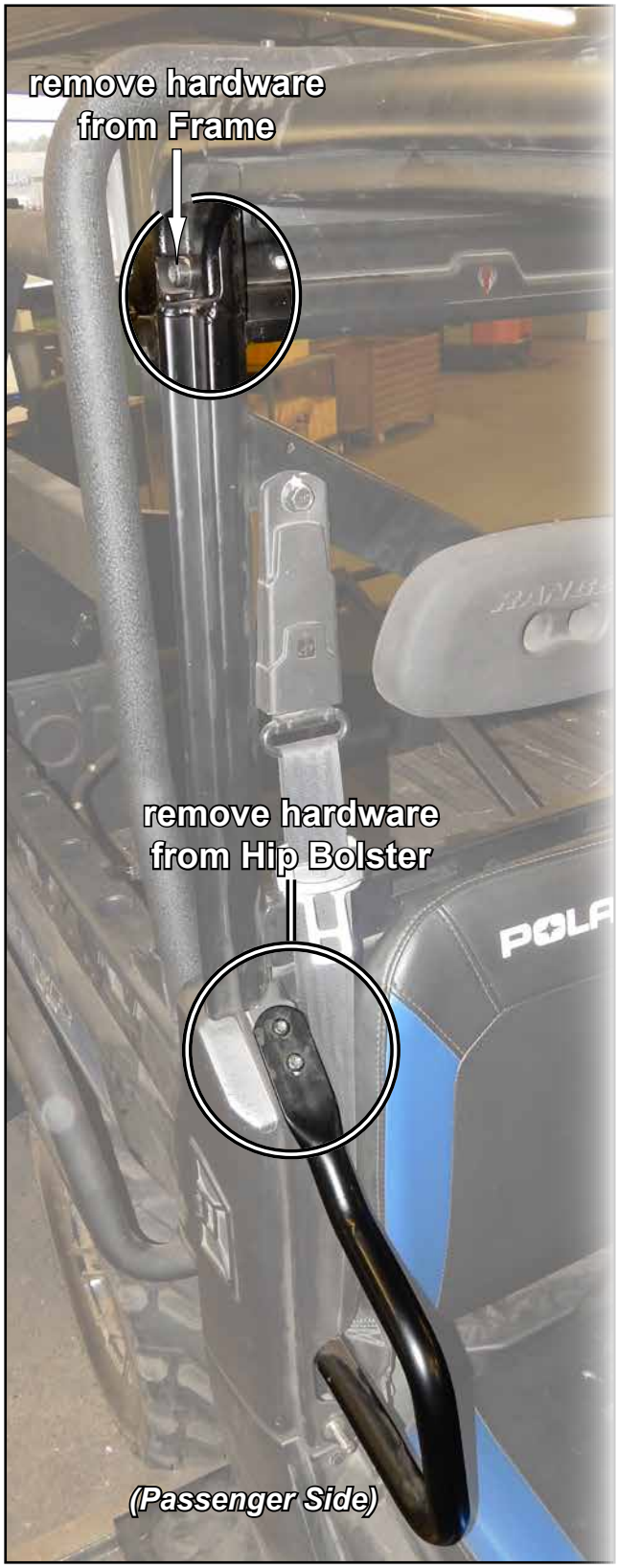

Do not tighten hardware completely unless noted.

- Install Striker Assembly (H) to Frame with hardware shown.
- Loosen Striker Pin as shown below.
- Repeat for opposite side.

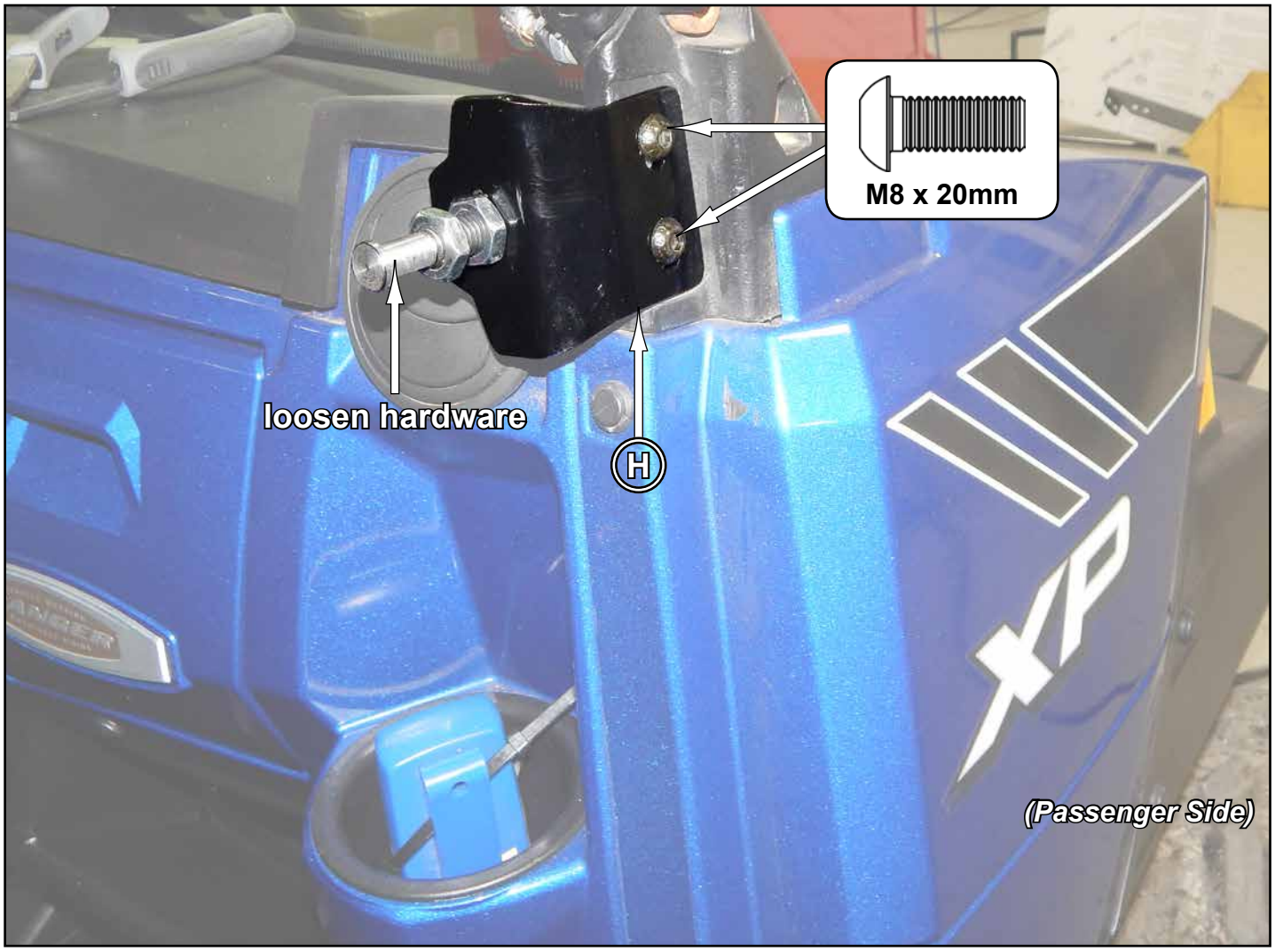

- Install Male Hinge Assembly; passenger (G) to Hinge Mount (C) and Rear Hinge Support (D) with hardware shown.
- Repeat for driver side components.

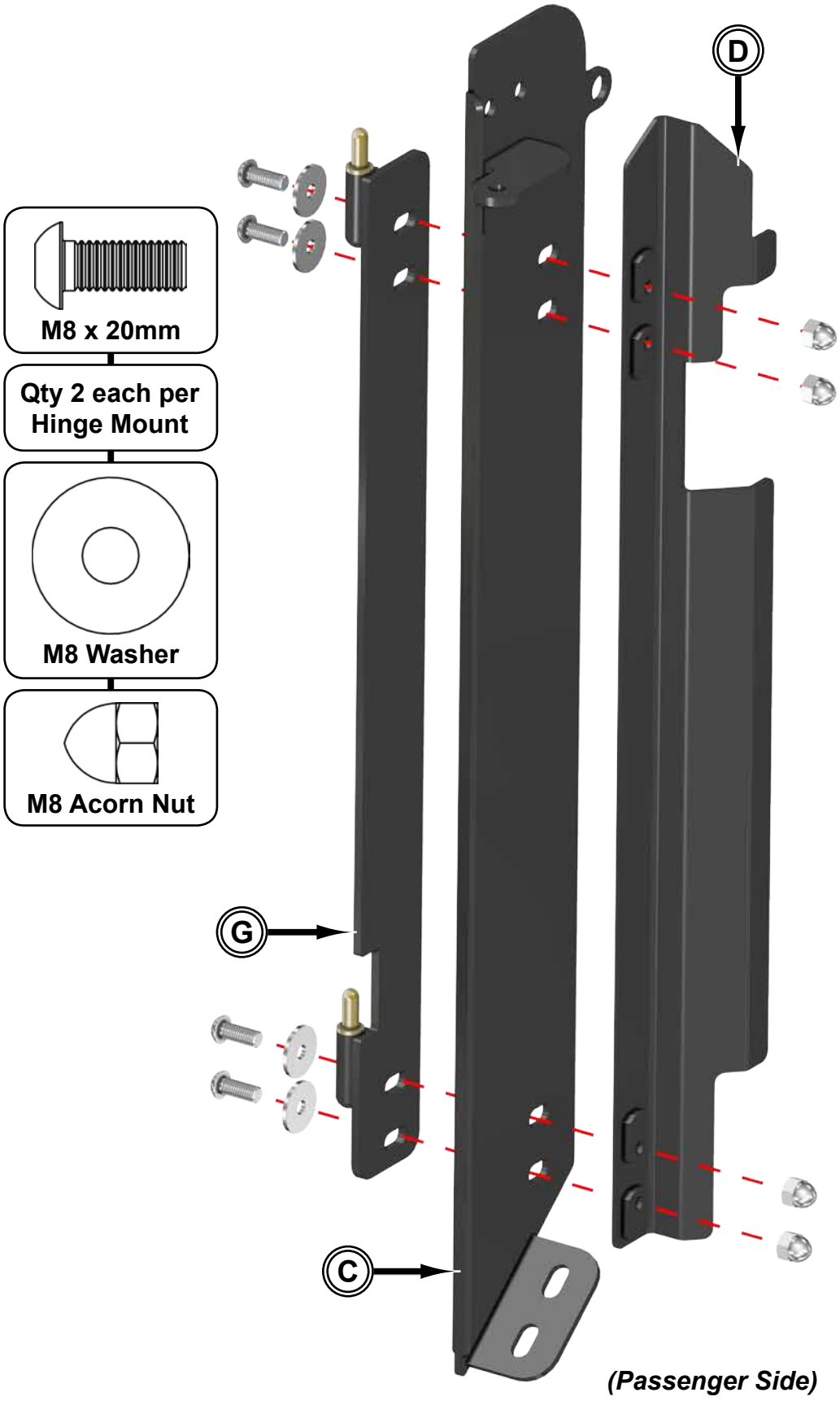

- Install Hinge Mount (C) and Strut Bracket (K) to machine with hardware as shown.
- Repeat for opposite side.

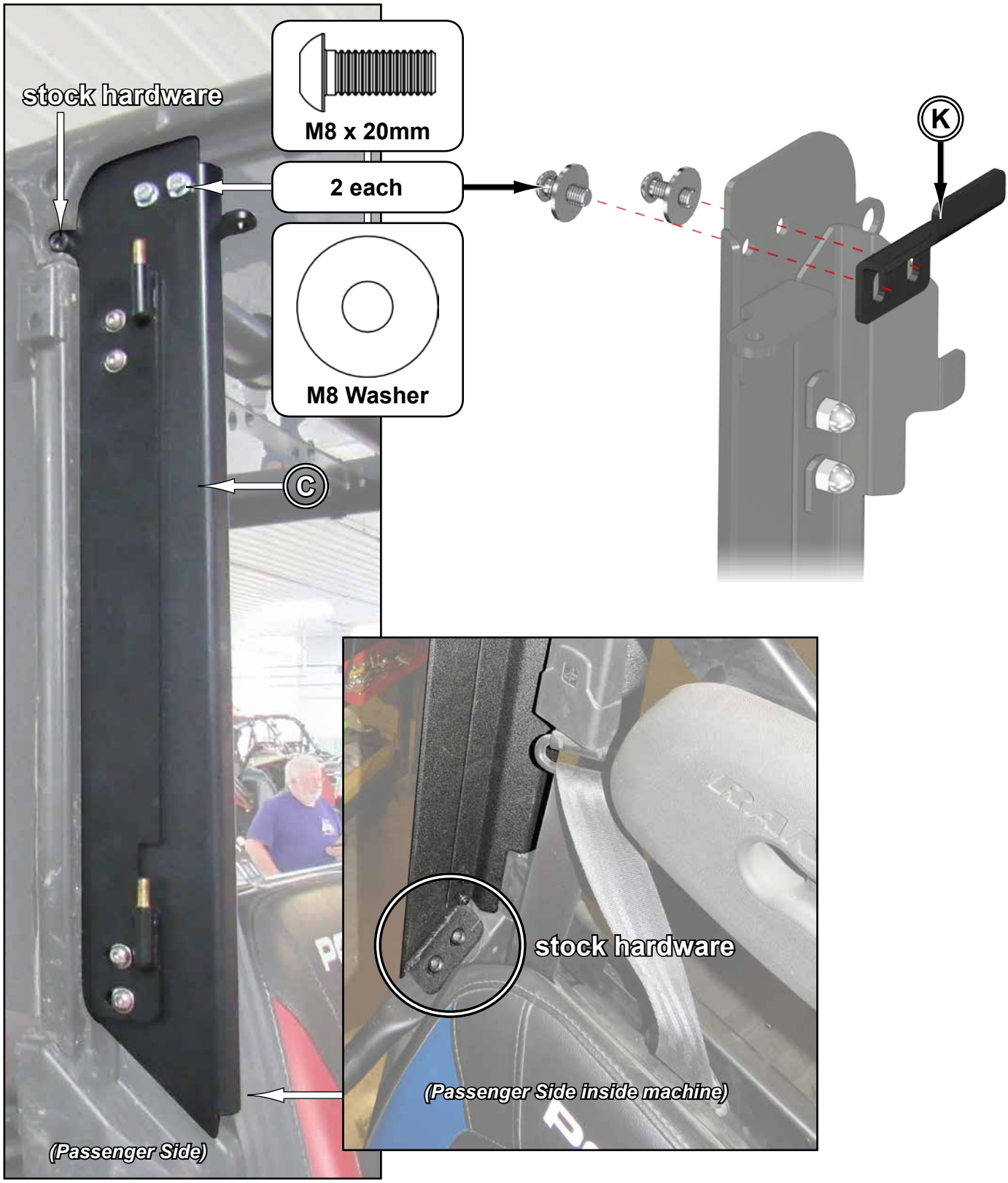

- Install Passenger Side Door (A).
- Install Strut (L) to Strut Bracket (K). Secure with hardware shown.
- Install provided Gasket to Hinge Mount (C).

- Close Door and engage Latch.
- Align Door to machine.
- Tighten all hardware completely.
- Repeat steps for opposite side.

- Remove installed Mounts on Mirrors. Use 8mm wrench. Discard Mount and hardware.

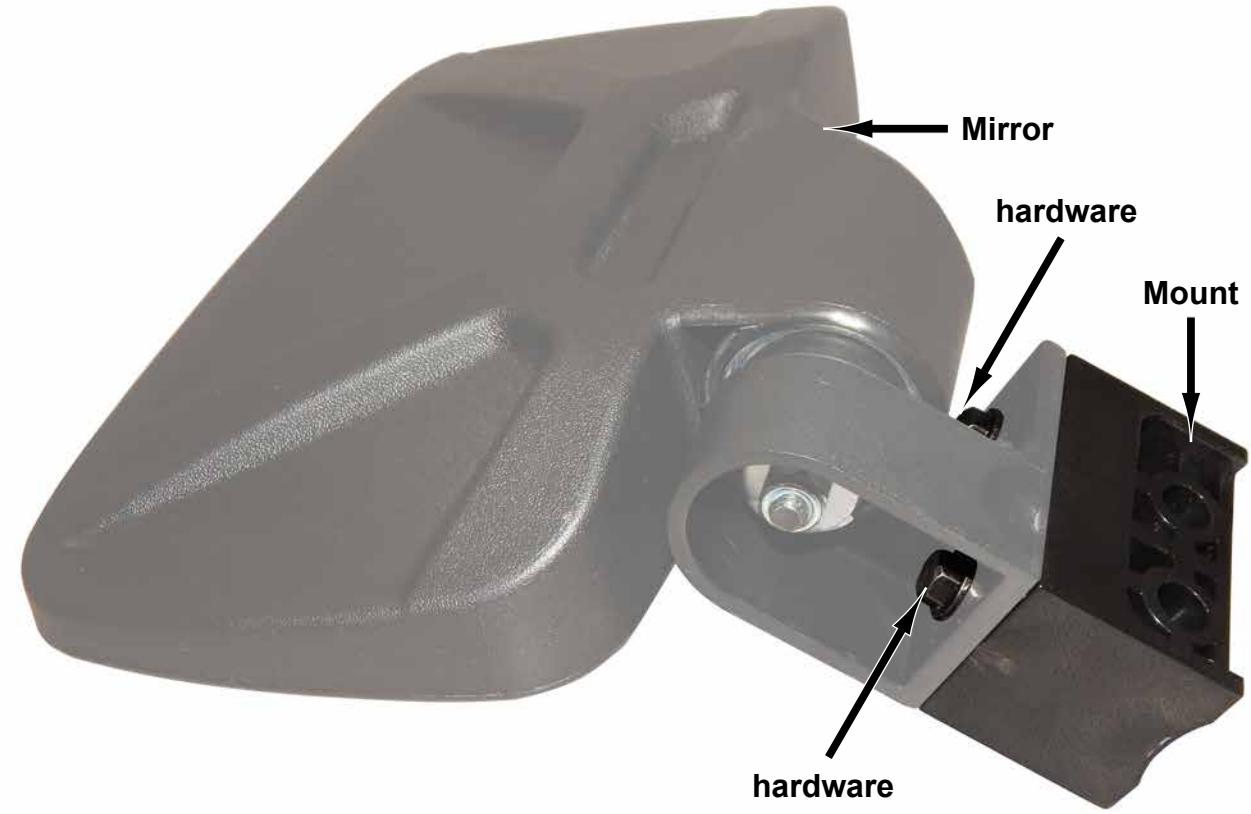

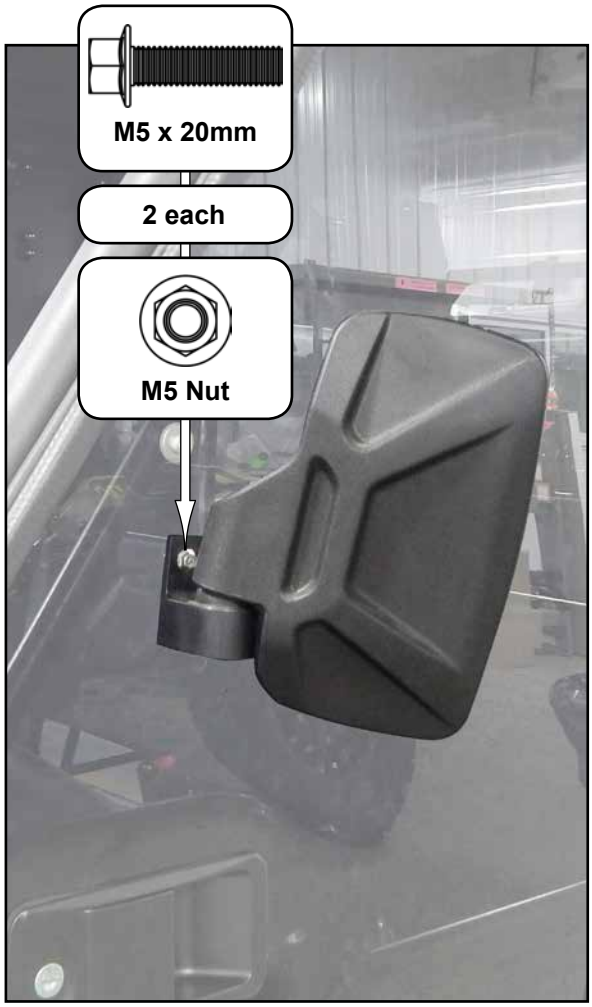

- Install Mirrors to Doors with hardware shown.
- Tighten hardware completely.

2753 Michigan Road • Madison, Indiana 47250 • 855-743-3427

INSTALLATION INSTRUCTIONS

Rear Full Doors: for Polaris Ranger Crew® XP 900

Item	Description
A	Passenger Side Door

Item	Description
B	Driver Side Door

DOOR-P-RAN9004-001 Door installation shown

DOOR-P-RAN9004-001 Doors

(kit contents continue on following pages)

Need help with your installation?

sales@superatv.com

www.superatv.com

1-855-743-3427

8:00am - 8:00pm EST M-Th
8:00am - 7:00pm EST Friday
9:00am - 2:00pm EST Saturday

Read instructions and view illustrations before beginning.

Thank You For Choosing

© 2016 SuperATV.com®. All Rights Reserved.

DOOR-P-RAN9004-002 Doors

Item	Description
A	Passenger Side Door

Item	Description
B	Driver Side Door

KEYS ARE LOCATED UNDER ORANGE TAPE. DO NOT DISCARD.

(kit contents continued)

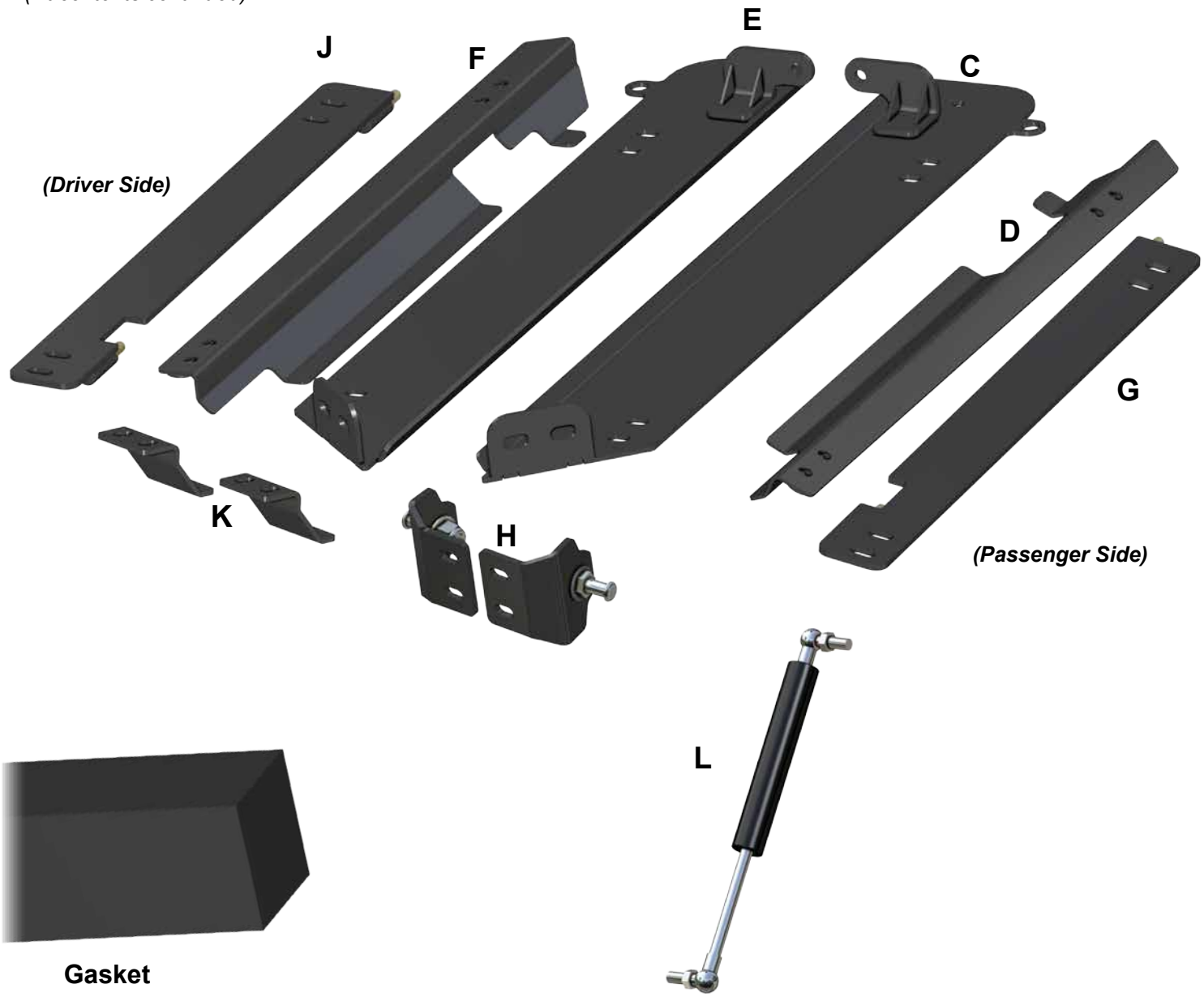

Item	Description
C	Hinge Mount; passenger
D	Rear Support; passenger
E	Hinge Mount; driver
F	Rear Support; driver
G	Male Hinge Assembly; passenger

Item	Description
H	Striker Assembly x 2
J	Male Hinge Assembly; driver
K	Strut Bracket x 2
L	Strut x 2

(kit contents continued)

12x 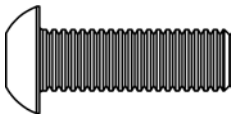 **M8-1.25 x 25mm Lg.**

8x **M8-1.25 Nylock Nut**

12x 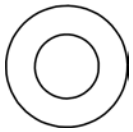 **M8 Washer**

8x 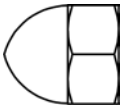 **M8 Acorn Nut**

Cleaning:

- Do not use a dry cloth, or your hands, to wipe off Doors; Scratching will occur.
- Do not use window cleaning fluids (Windex, 409, etc) or any solvents (gasoline, denatured alcohol, acetone, etc).
- Never use abrasive cleaners, abrasive pads, or gritty cloths.

1. Thouroughly rinse Doors to float off dirt and mud.
2. Using a soft cloth, or microfiber cloth, clean Doors with warm water and a gentle detergent. Baby shampoo or hand washing soap are recommended.
3. To prevent water spots, use a chamois and blot Doors dry.

Rear Removal: Remove components shown from both sides of machine.

- keep all components removed from machine -

Rear Removal continued:

Do not tighten hardware completely unless noted.

- Install Striker Assembly (H) to Frame.
- Loosen Striker Pin as shown below.
- Repeat for opposite side.

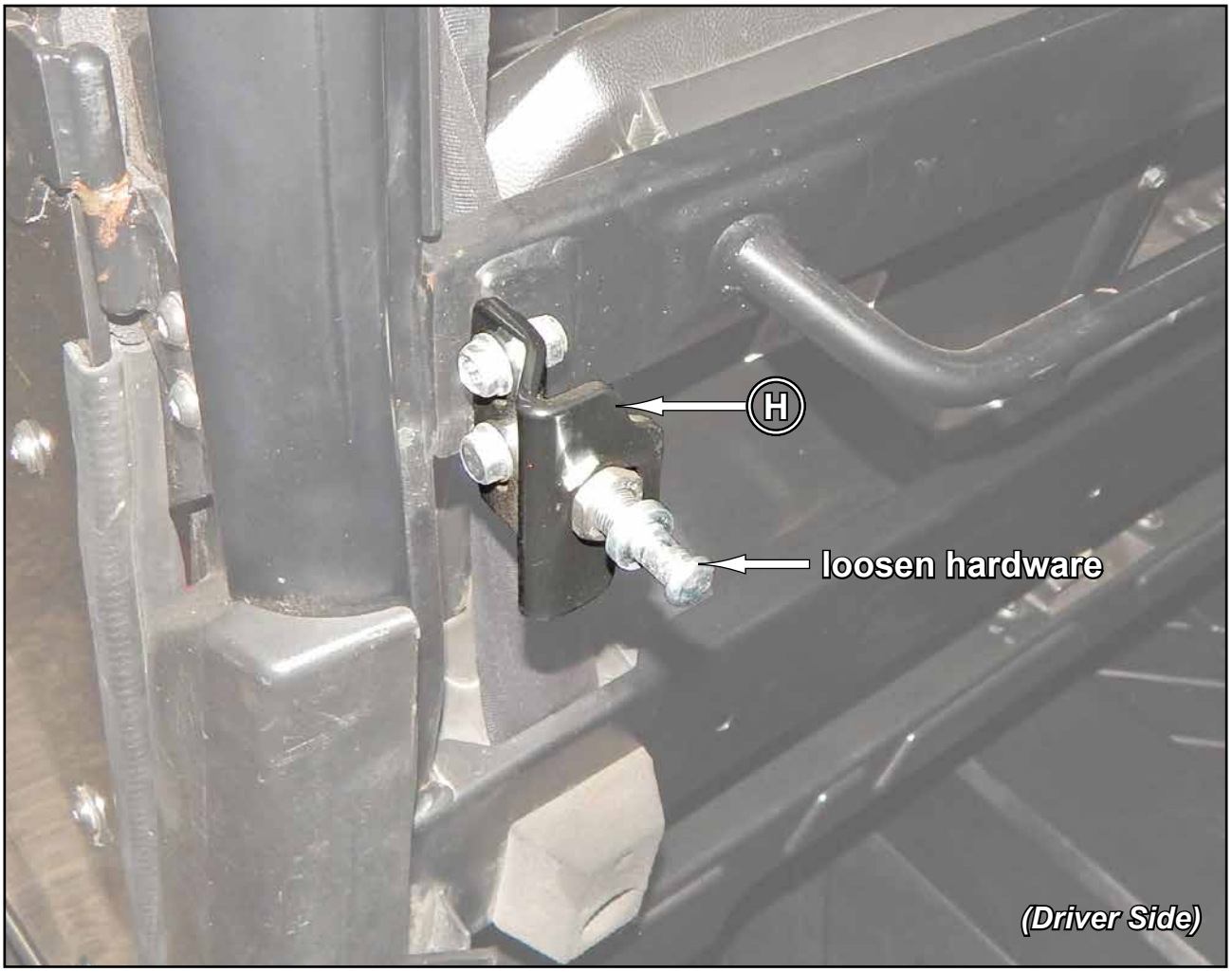

- Install Male Hinge Assembly; passenger (G) to Hinge Mount (C) and Rear Hinge Support (D) with hardware shown.
- Repeat for driver side components.

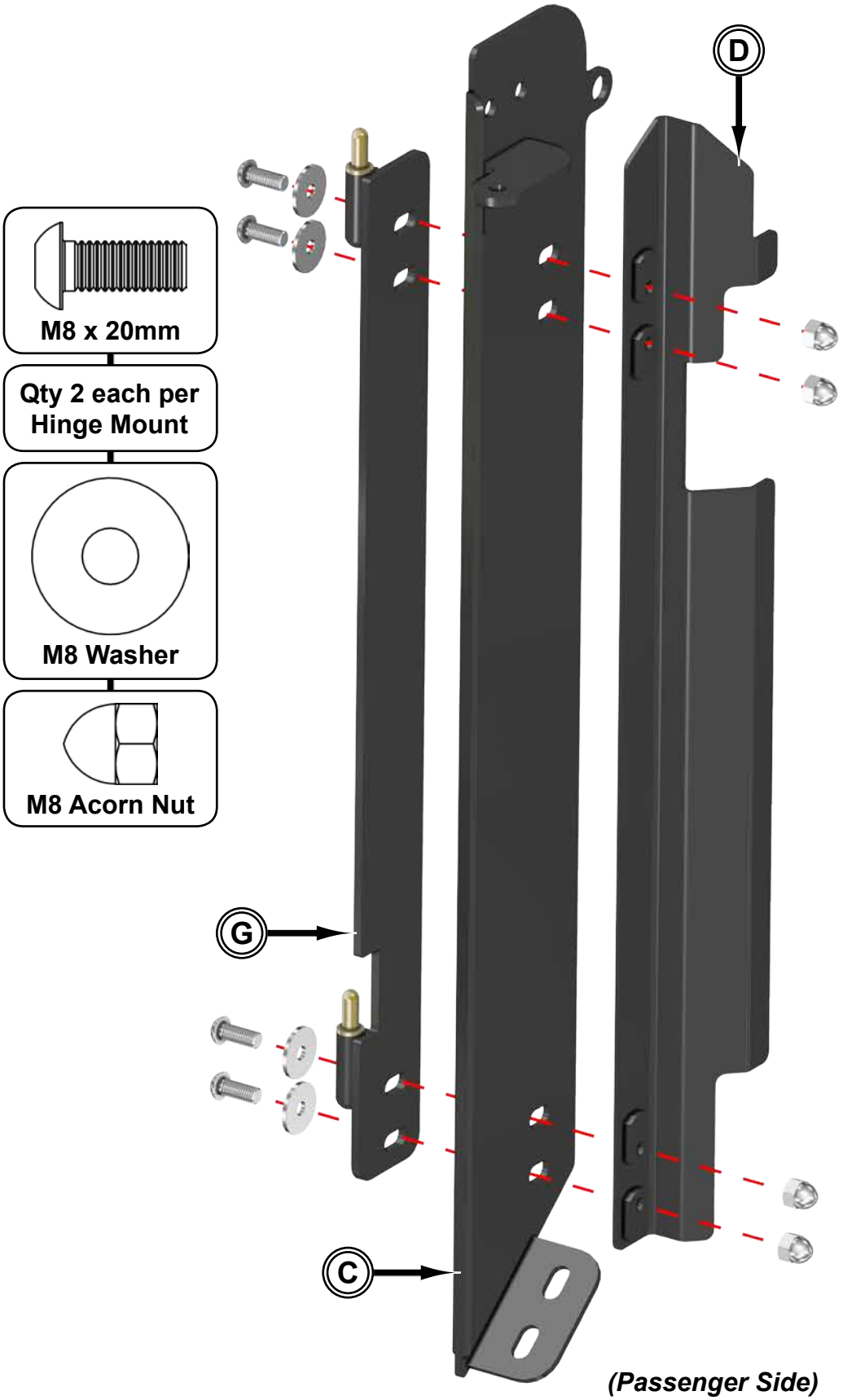

- Install Hinge Mount (E) to machine with stock hardware.
- Install Strut Bracket (K) to Hinge Mount (E) with hardware shown.
- Repeat for opposite side.

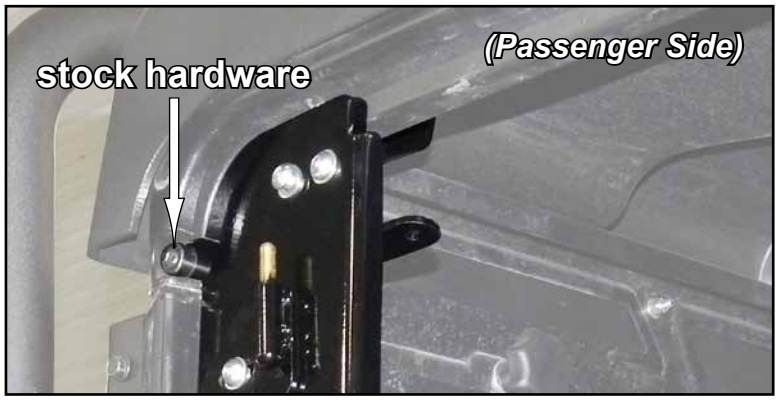

- Install Driver Side Door (B).

- Secure Strut (L) to Driver Door (B) with hardware shown.

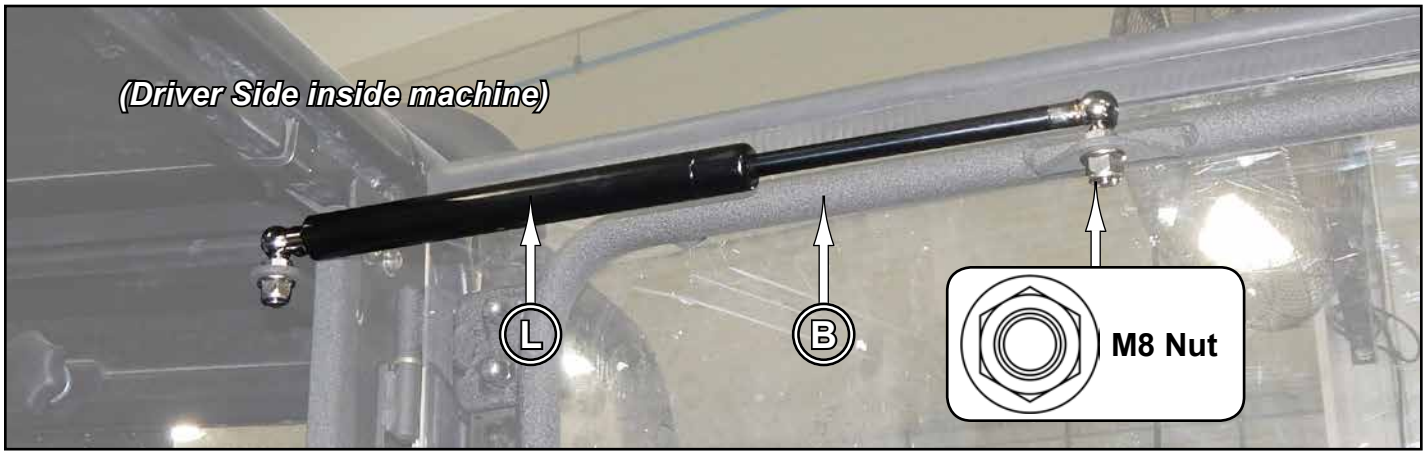

- Engage Latch and align Driver Door (B) to machine.
- Tighten all hardware completely.
- Repeat steps for opposite side.

- Installer may add Gasket to location shown to further seal cab.
- Repeat for opposite side.

Liability Statement

SuperATV's® products are designed to best fit user's ATV/UTV under stock conditions. Adding, modifying, or fabricating any factory or aftermarket parts will void any warranty provided by SuperATV® and is not recommended. SuperATV's® products could interfere with other aftermarket accessories. If user has aftermarket products on machine, contact SuperATV® to verify that they will work together.

Although SuperATV® has thousands of satisfied customers, user should be aware that installing lift kits, long travel, or suspension kits, tires, etc. will change the ride of machine and may increase maintenance and part wear. Operating any off-road machine while, or after, consuming alcohol and/or drugs increases risk of bodily harm or death. No warranty or representation is made as to this product's ability to protect user from severe injury or death. SuperATV® urges operators and occupants to wear a helmet and appropriate riding gear at all times.

By purchasing and installing SuperATV® products, user agrees that should damages occur, SuperATV® will not be held responsible for loss of time, use, labor fees, replacement parts, or freight charges. SuperATV®, nor any 3rd party, will not be held responsible for any direct, indirect, incidental, special, or consequential damages that result from any product purchased from SuperATV®. The total liability of seller to user for all damages, losses, and causes of action, if any, shall not exceed the total purchase price paid for the product that gave rise to the claim.

SuperATV® will warranty only parts provided by SuperATV®. Any damage or problems with OEM housings, bearings, seals, or other manufacturers' products will not be covered by SuperATV®. SuperATV® parts and products are not warrantied if item was not installed properly, misused, or modified.

Installing, adding, modifying, or fabricating any factory or aftermarket product to your ATV/UTV may violate certain local, state, and federal laws. Be advised that laws vary depending on town, city, county, state, etc. Use of certain products on public streets, roads, or highways may be in violation law. The Buyer is solely and exclusively legally and personally responsible for any violation of the law by the installation or use of the product. You must abide by all local, state, and federal laws, including but not limited to vehicle safety, traffic laws, and ordinances. It is your responsibility to know the laws and how they apply to you.

The Buyer is responsible to fully understand the capability and limitations of his/her vehicle according to manufacturer specifications, warnings and instructions and agrees to hold SuperATV® harmless from any damage resulting from failure to adhere to such specifications, warnings and/ or instructions. The Buyer is also responsible to obey all applicable federal, state, and local laws and ordinances when operating his/her vehicle while using this product, and the Buyer agrees to hold SuperATV® harmless from any violation thereof.