2753 Michigan Road • Madison, Indiana 47250 • 855-743-3427

INSTALLATION INSTRUCTIONS

Lift Kit: for Can-Am Maverick X3

- **SuperATV strongly recommends using a spring compressor when removing Springs.**
- **A Press or Ball Joint tool is required to remove and install Ball Joints.**

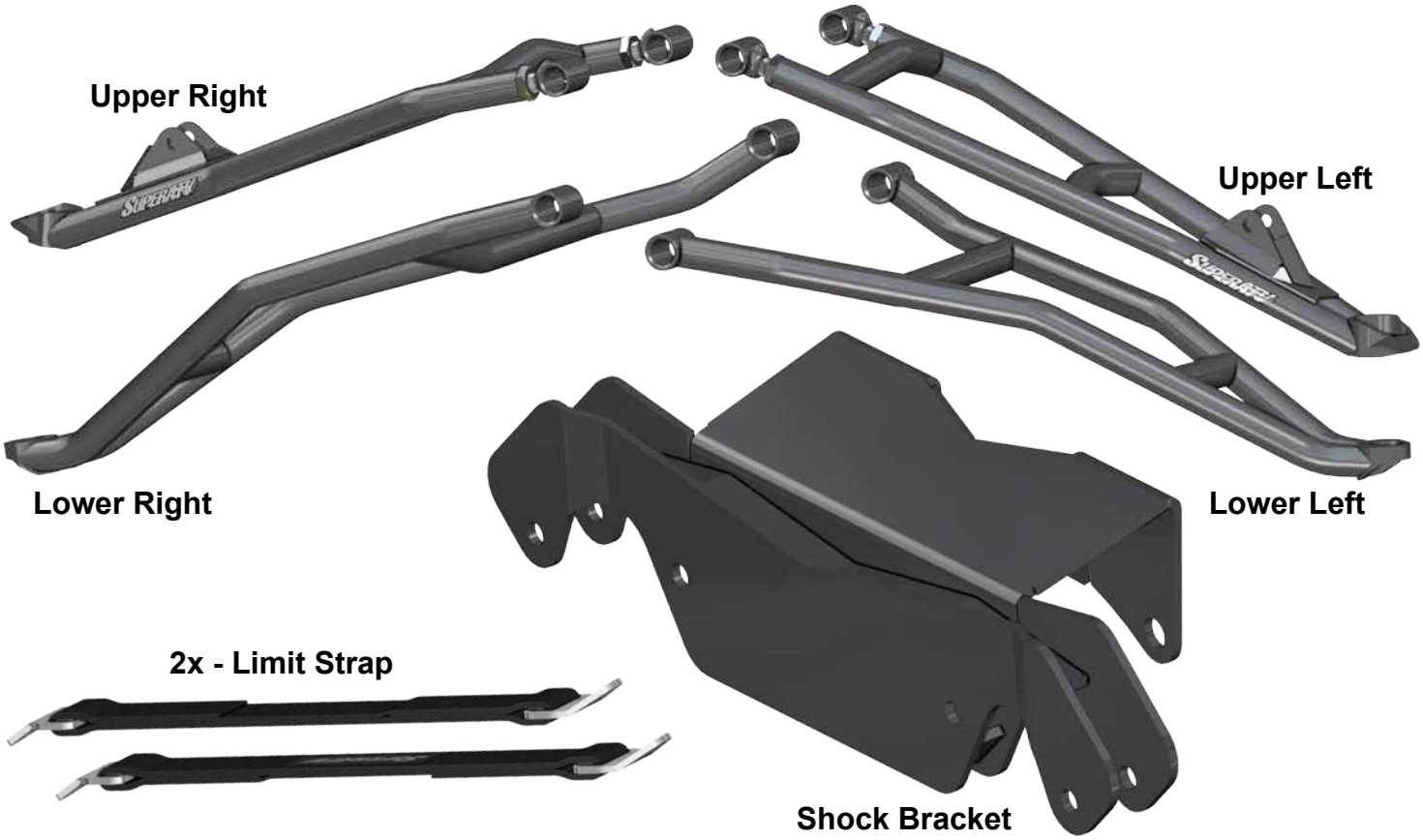

Liability Statement

SuperATV's® products are designed to best fit user's ATV/UTV under stock conditions. Adding, modifying, or fabricating any factory or aftermarket parts will void any warranty provided by SuperATV® and is not recommended. SuperATV's® products could interfere with other aftermarket accessories. If user has aftermarket products on machine, contact SuperATV® to verify that they will work together.

Although SuperATV® has thousands of satisfied customers, user should be aware that installing lift kits, long travel, or suspension kits, tires, etc. will change the ride of machine and may increase maintenance and part wear. Operating any off-road machine while, or after, consuming alcohol and/or drugs increases risk of bodily harm or death. No warranty or representation is made as to this product's ability to protect user from severe injury or death. SuperATV® urges operators and occupants to wear a helmet and appropriate riding gear at all times.

By purchasing and installing SuperATV® products, user agrees that should damages occur, SuperATV® will not be held responsible for loss of time, use, labor fees, replacement parts, or freight charges. SuperATV®, nor any 3rd party, will not be held responsible for any direct, indirect, incidental, special, or consequential damages that result from any product purchased from SuperATV®. The total liability of seller to user for all damages, losses, and causes of action, if any, shall not exceed the total purchase price paid for the product that gave rise to the claim.

SuperATV® will warranty only parts provided by SuperATV®. Any damage or problems with OEM housings, bearings, seals, or other manufacturers' products will not be covered by SuperATV®. SuperATV® parts and products are not warrantied if item was not installed properly, misused, or modified.

Installing, adding, modifying, or fabricating any factory or aftermarket product to your ATV/UTV may violate certain local, state, and federal laws. Be advised that laws vary depending on town, city, county, state, etc. Use of certain products on public streets, roads, or highways may be in violation law. The Buyer is solely and exclusively legally and personally responsible for any violation of the law by the installation or use of the product. You must abide by all local, state, and federal laws, including but not limited to vehicle safety, traffic laws, and ordinances. It is your responsibility to know the laws and how they apply to you.

The Buyer is responsible to fully understand the capability and limitations of his/her vehicle according to manufacturer specifications, warnings and instructions and agrees to hold SuperATV® harmless from any damage resulting from failure to adhere to such specifications, warnings and/ or instructions. The Buyer is also responsible to obey all applicable federal, state, and local laws and ordinances when operating his/her vehicle while using this product, and the Buyer agrees to hold SuperATV® harmless from any violation thereof.

Need help with your installation?

sales@superatv.com

www.superatv.com

1-855-743-3427

8:00am - 9:00pm EST M-Th
8:00am - 7:00pm EST Friday
9:00am - 2:00pm EST Saturday

Read instructions and view illustrations before beginning.

Thank You For Choosing

© 2019 SuperATV.com®. All Rights Reserved.

Right Trailing Arm

Left Trailing Arm

2x - Sway Bar Link

2x - Rear Spring Spacer

Rear Brake Lines

Location	Length (Approx)
To Calipers	96”
T-Fitting to Master Cylinder	28”

T-Fitting

1x 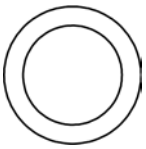 T-Fitting Spacer

1x Sheet Metal Screw

1x 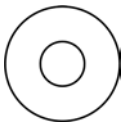 M5 Washer

6x - Thick Bushing

6x - Thin Bushing

12x - Bushing

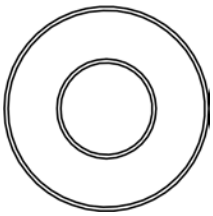

6x - Radius Arm Misalignment Bushing
DISCARD; not used for this application

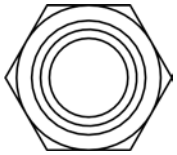

6x - M12 Nut

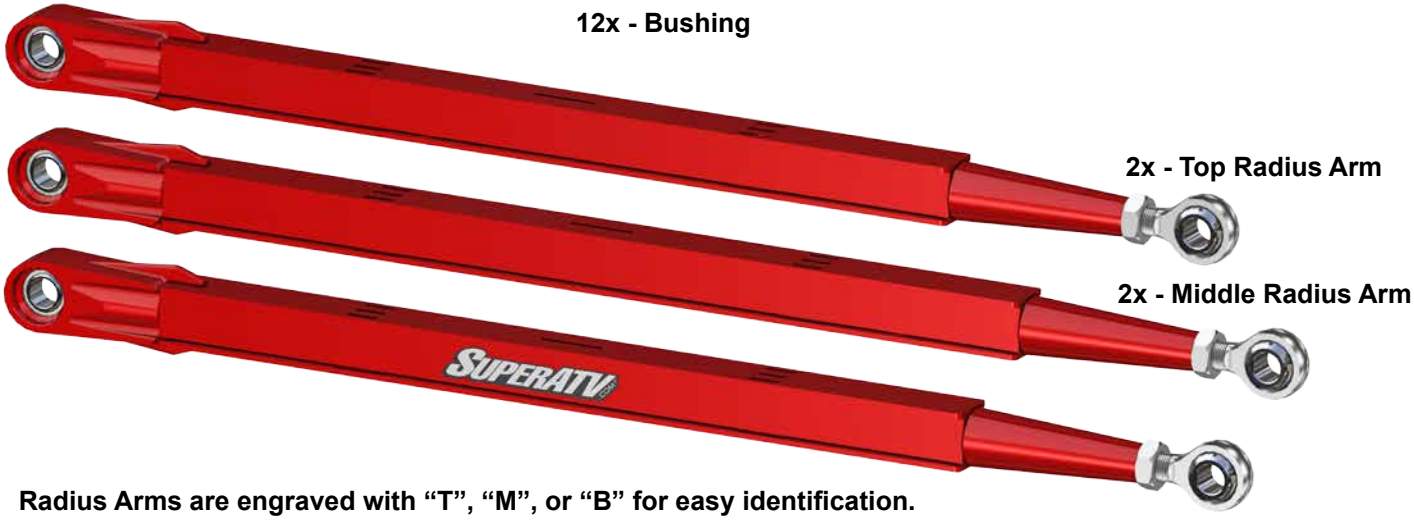

2x - Top Radius Arm

2x - Middle Radius Arm

2x - Bottom Radius Arm

Radius Arms are engraved with “T”, “M”, or “B” for easy identification.

Front Removal: Keep all components removed from machine.

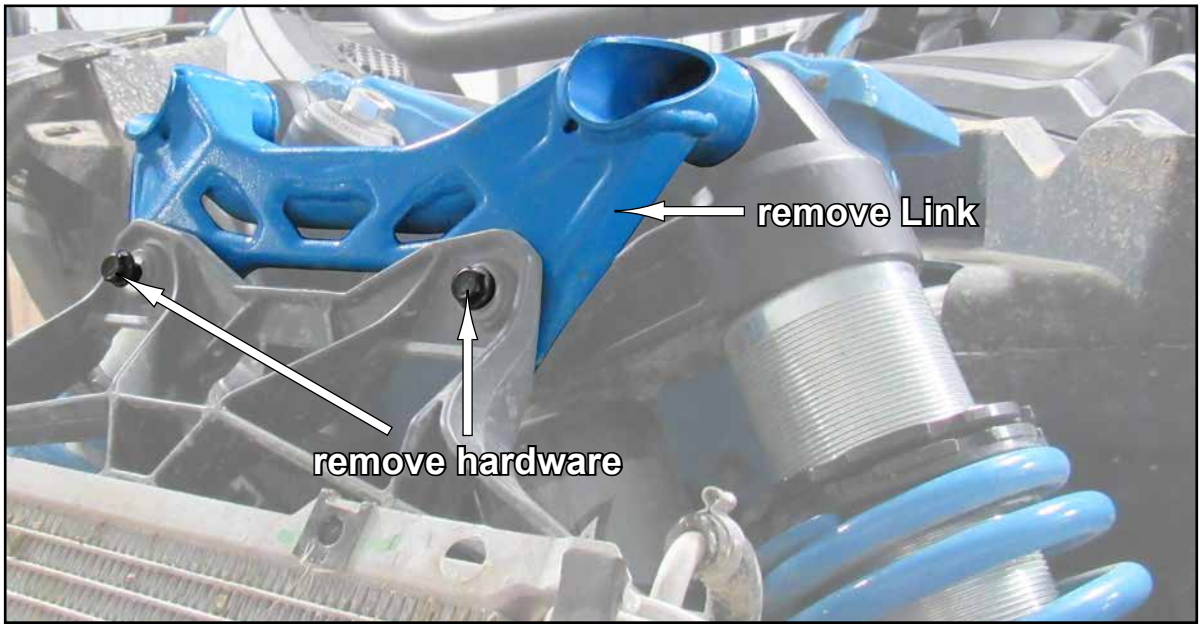

Front Removal continued

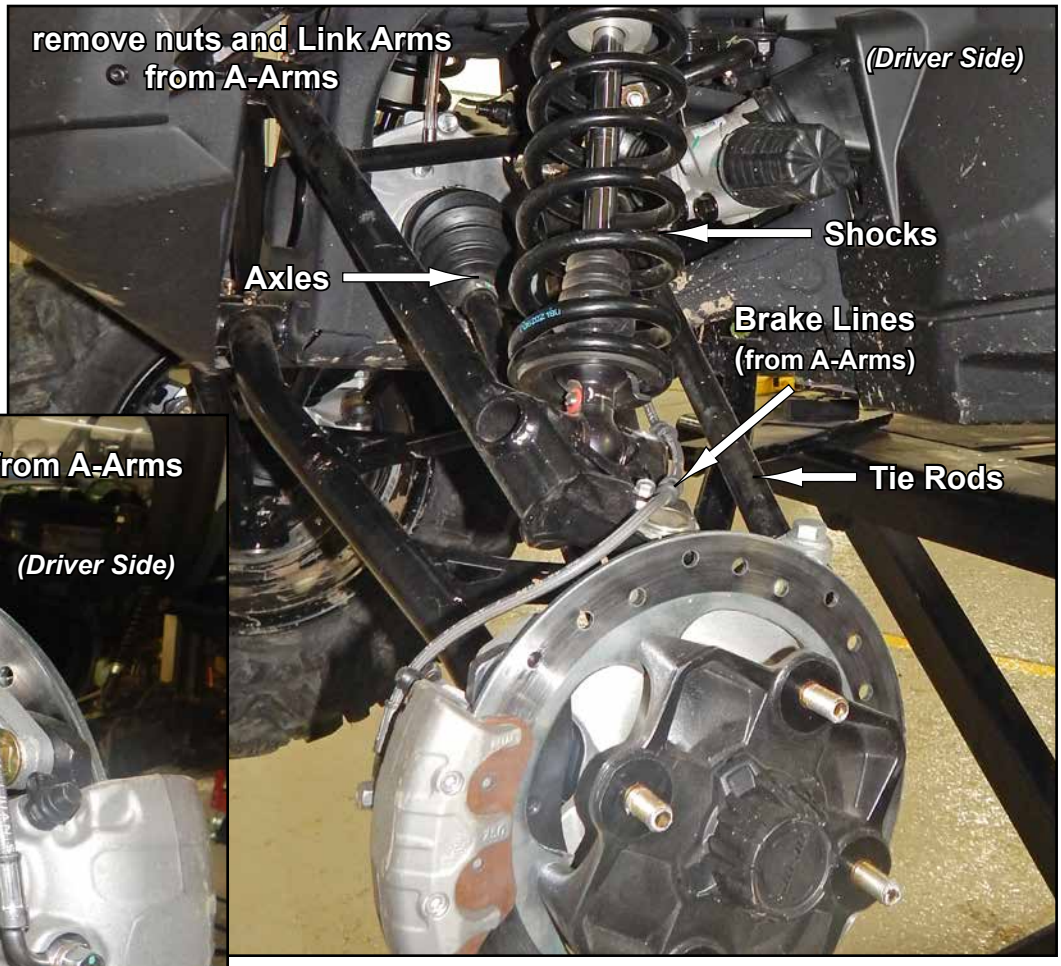

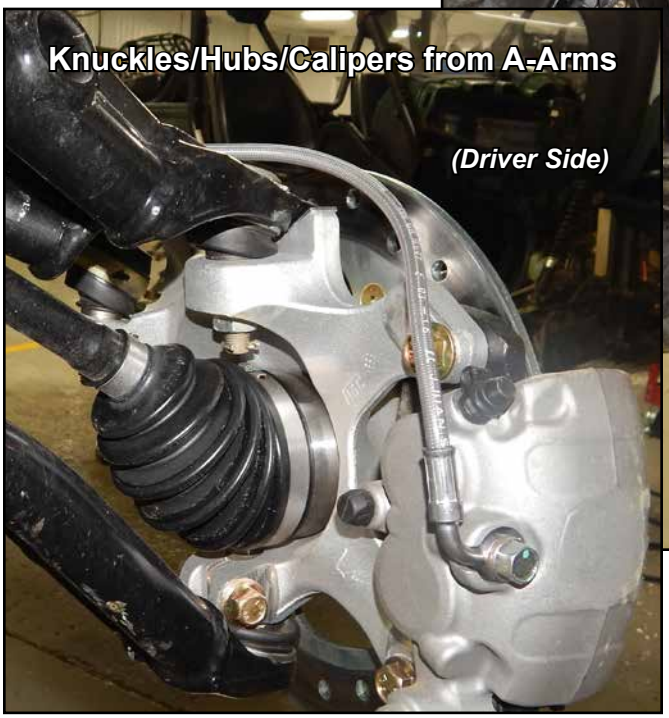

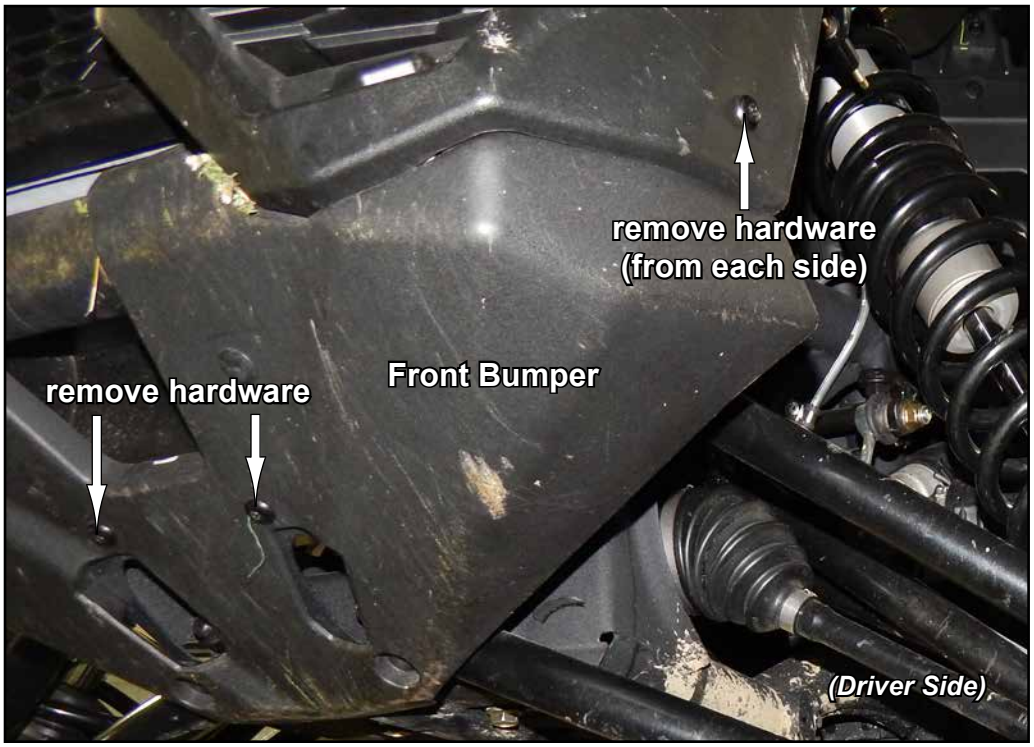

Front Removal continued

Remove A-Arms from machine.

Rear Removal: ***Keep all components removed from machine.***

- Drill out rivets that are securing Brake Line Clips.
- Remove Axle Nut, Caliper, Hub, Disc, and Knuckle.
- Remove Shock and Control Links from machine.
- Remove Sway Bar Link.
- Remove Rear Arm from machine.
- Repeat for opposite side.

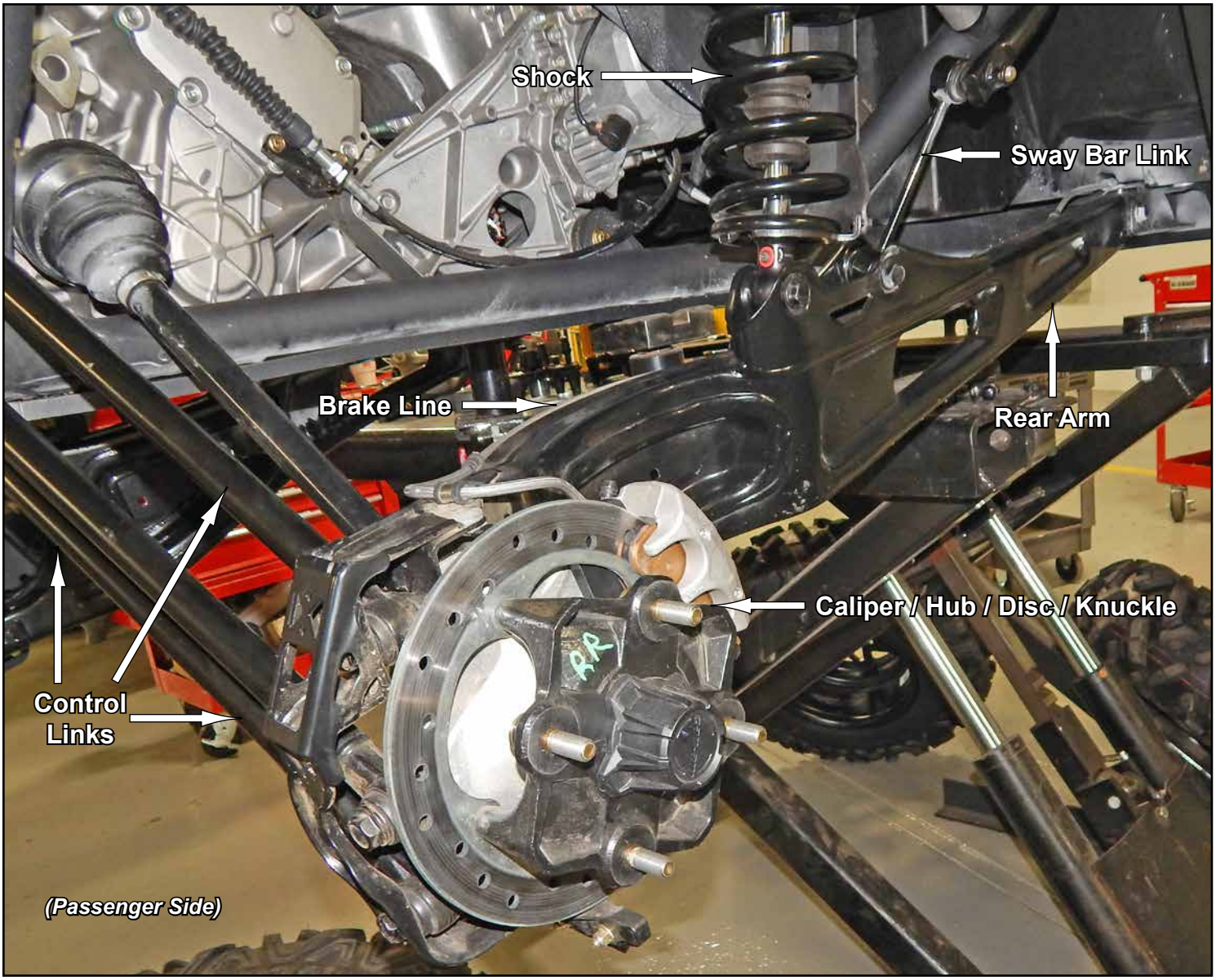

- Remove Rear Brake Lines from Calipers and Master Cylinder.

PIVOT BLOCK SETTINGS

- Place new A-Arms onto a flat surface and verify dimension shown.
- *Negative 1° camber setting is achieved when Pivot Blocks are set to this dimension.*
- See last page for additional camber information.

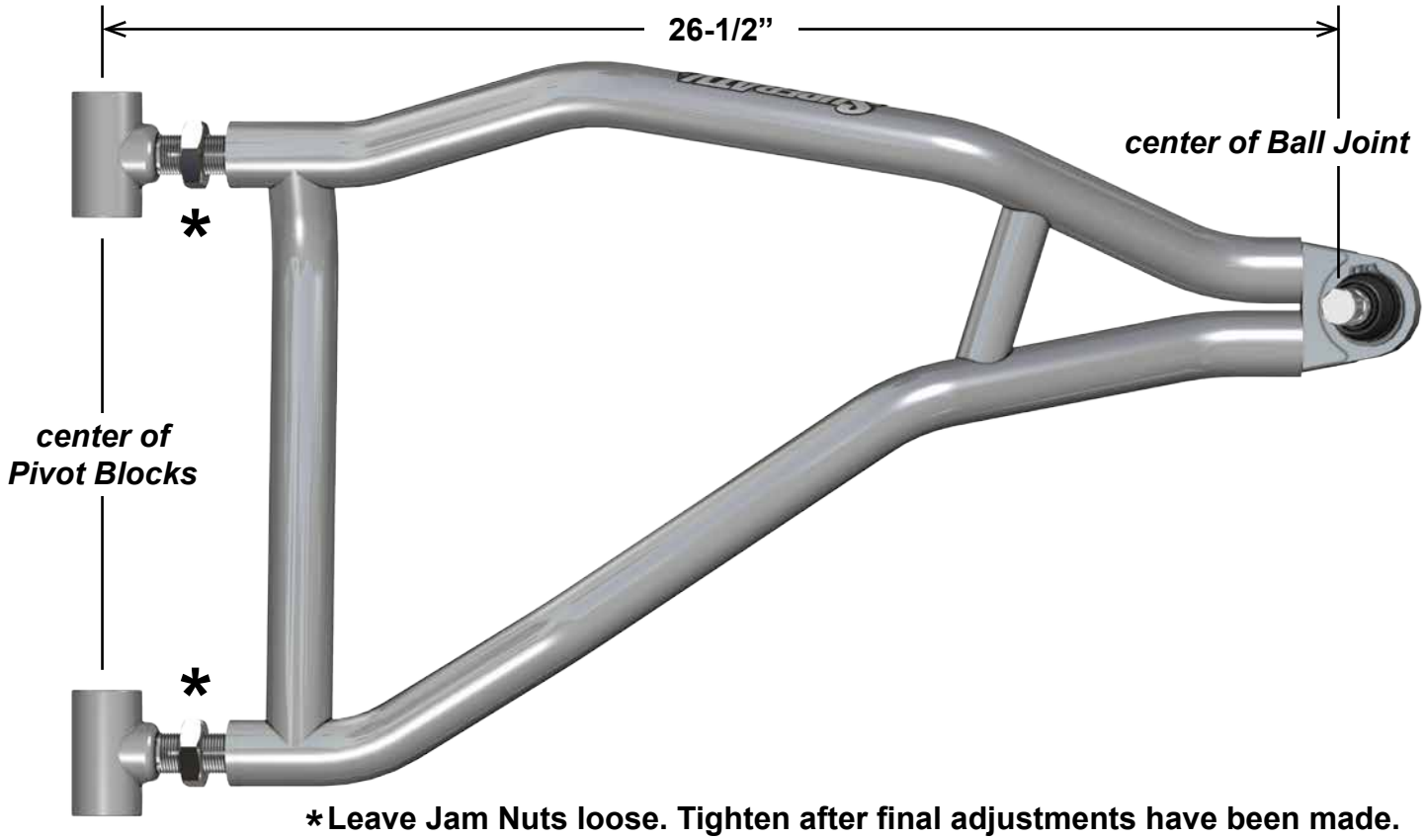

∗Leave Jam Nuts loose. Tighten after final adjustments have been made.

INSTALL Z-BEND TIE RODS AND FRONT AXLES

- Install stock Cushions and Wear Plates into new A-Arms.

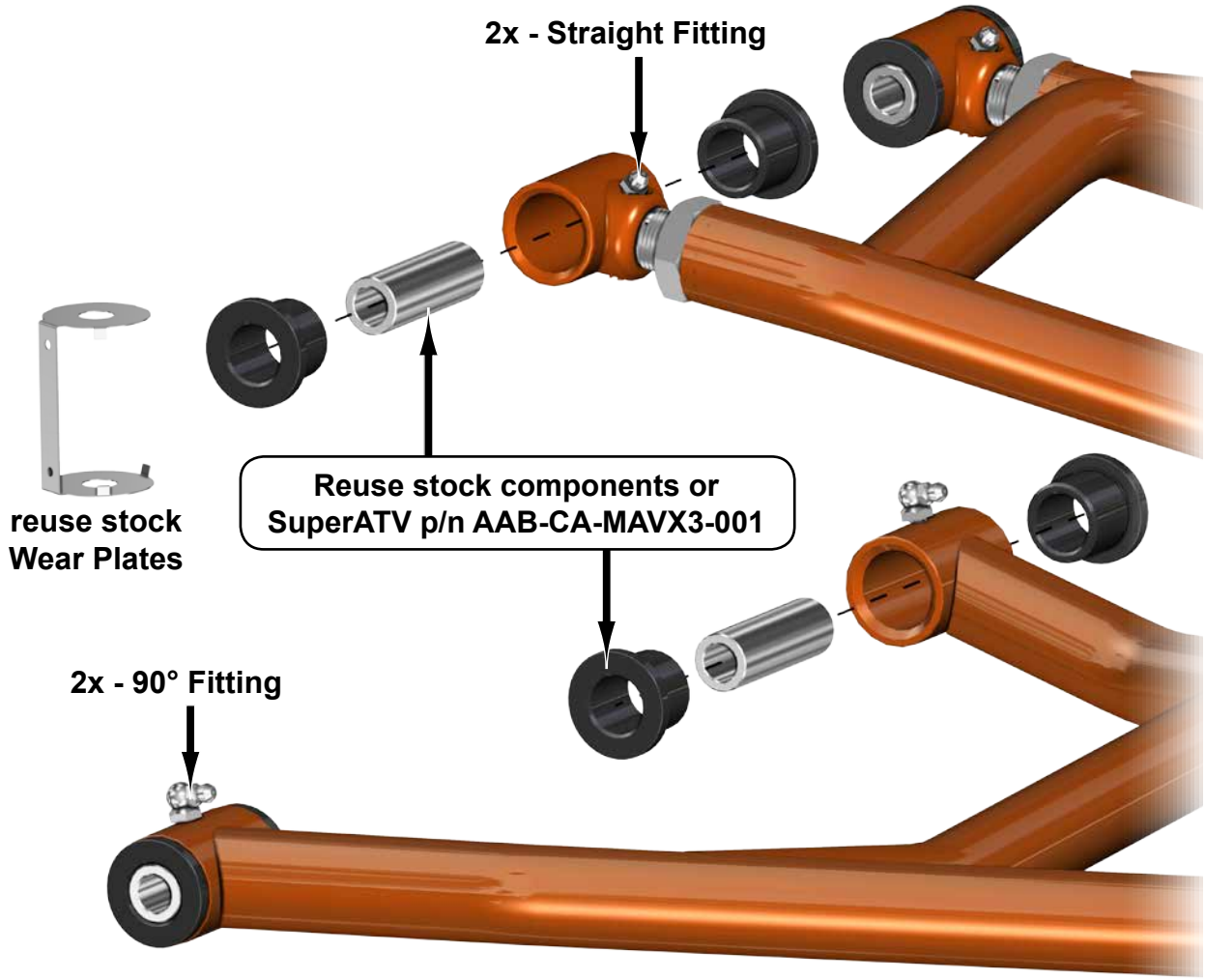

- Install stock Ball Joints into new A-Arms.

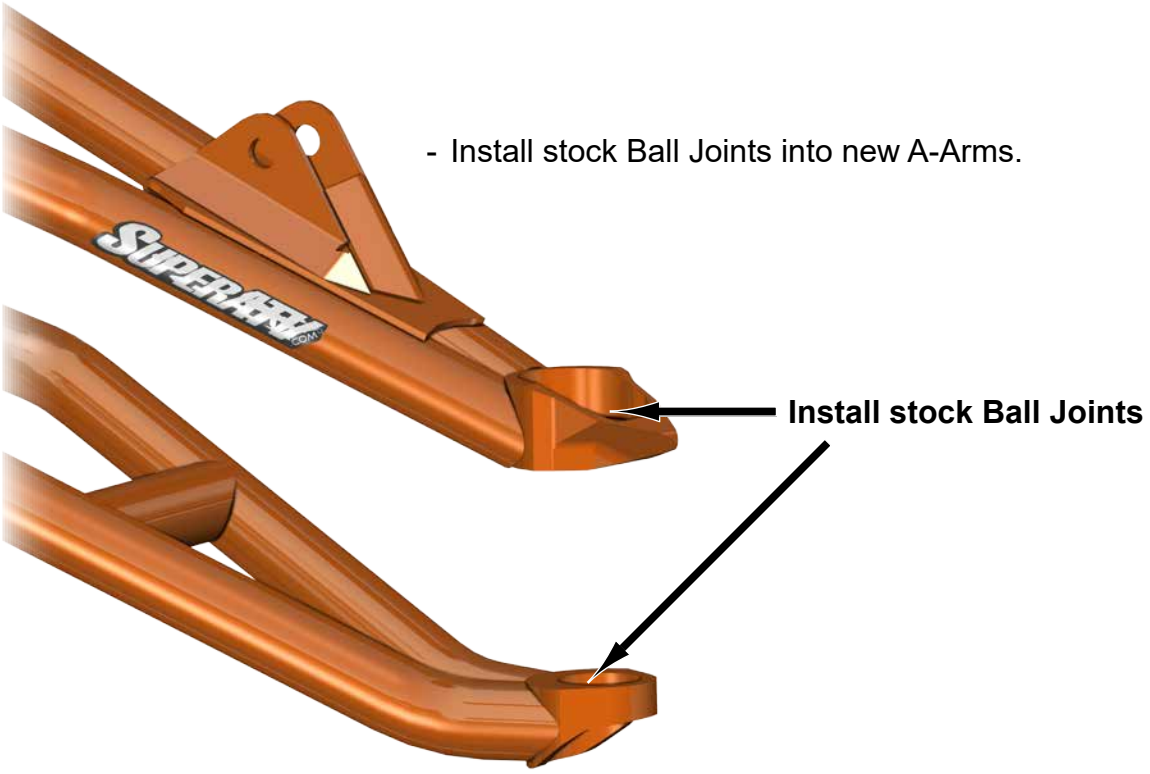

- Install Lower A-Arms and stock Lower Link Arm onto stock bolts.
- ***Do not install any Nuts until all final adjustments have been completed.***

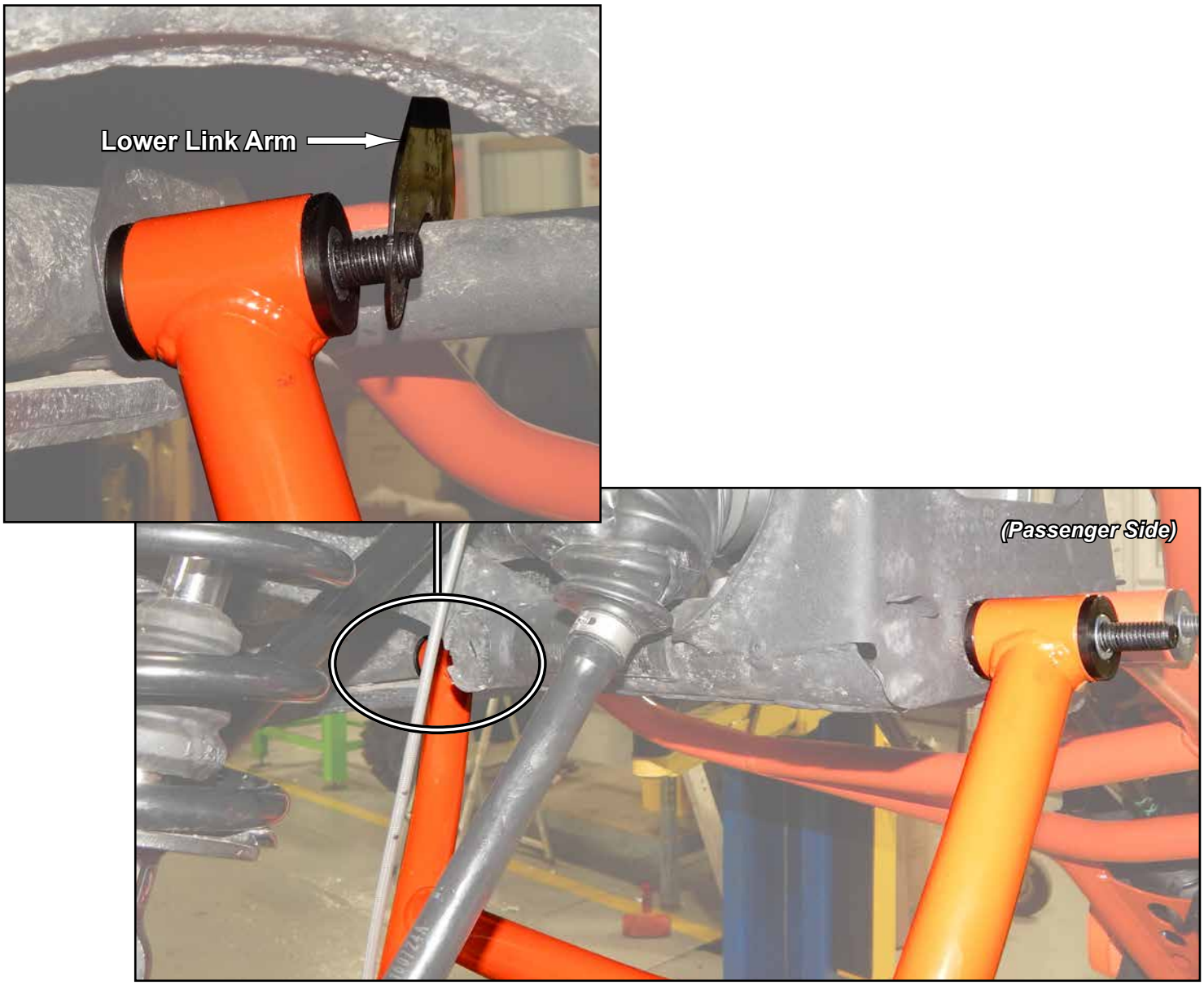

- Install Upper A-Arms and Upper Link Arm onto stock bolts. ***Do not install Nuts until all final adjustments have been completed.***
- Reinstall stock Upper Link Arm.

- Remove Socket/Spacer and place Front Bumper onto stock bolts. ***Do not install Nuts until all final adjustments have been completed.***

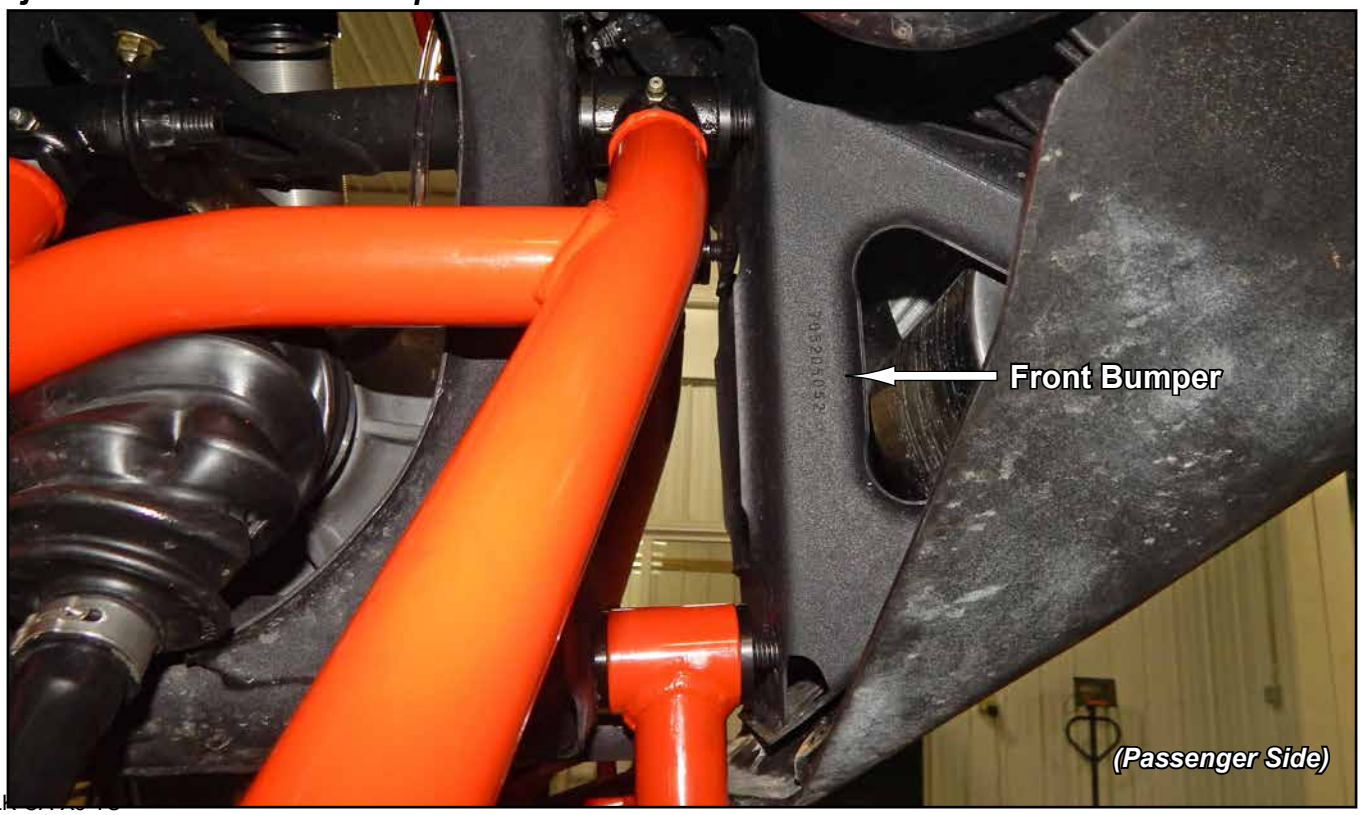

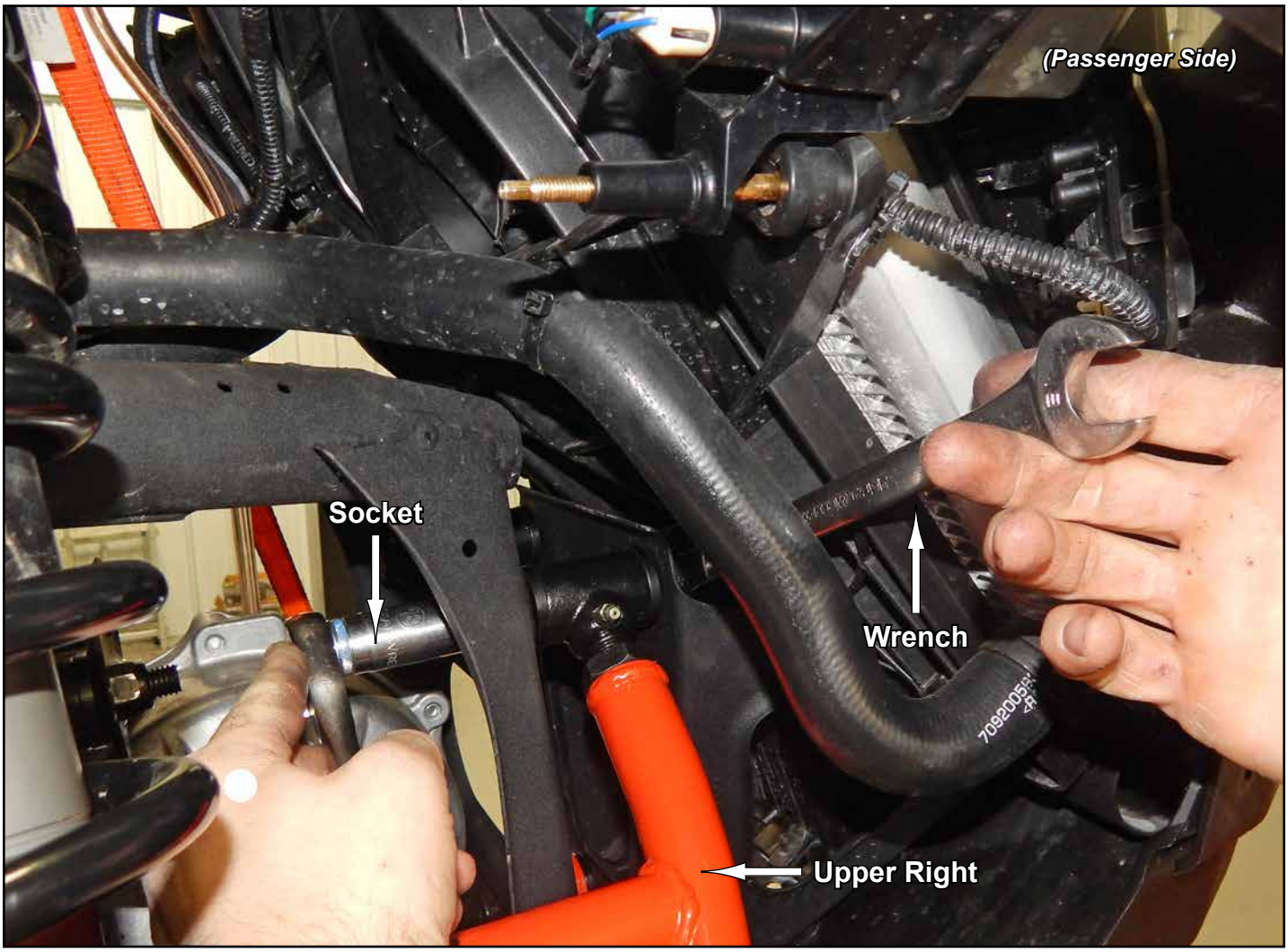
(Passenger Side)
Socket
Wrench
Upper Right

Reinstall Front Bumper hardware only after final adjustments have been made.
(Driver Side)
(Passenger Side)
Reinstall stock A-Arm nuts only after final adjustments have been made.

- Resecure Shroud. Tighten completely.

- Install Shock Bracket and Link to Shock Mount with stock hardware.

- Install Shock and Limit Strap with hardware shown.

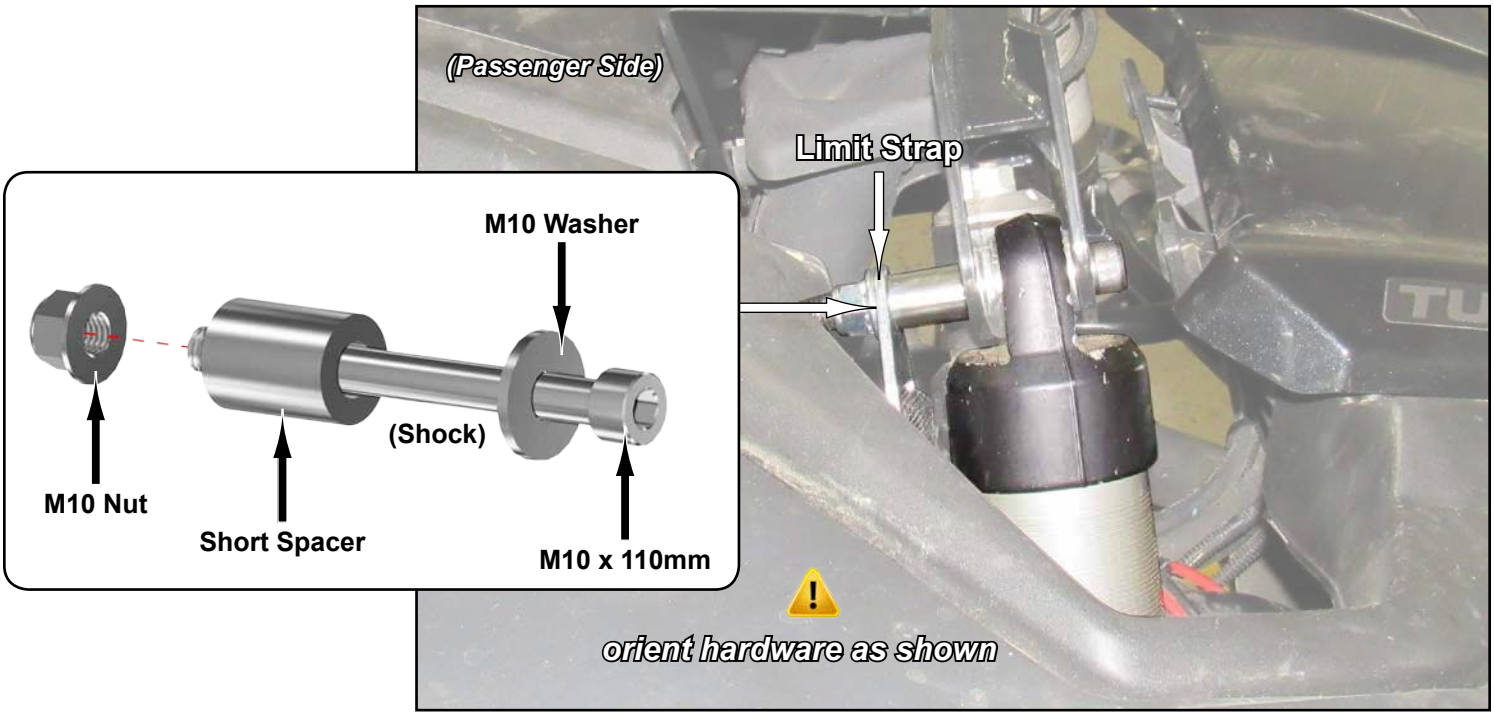

- Install Shock and Limit Strap to Upper Arms with hardware shown.

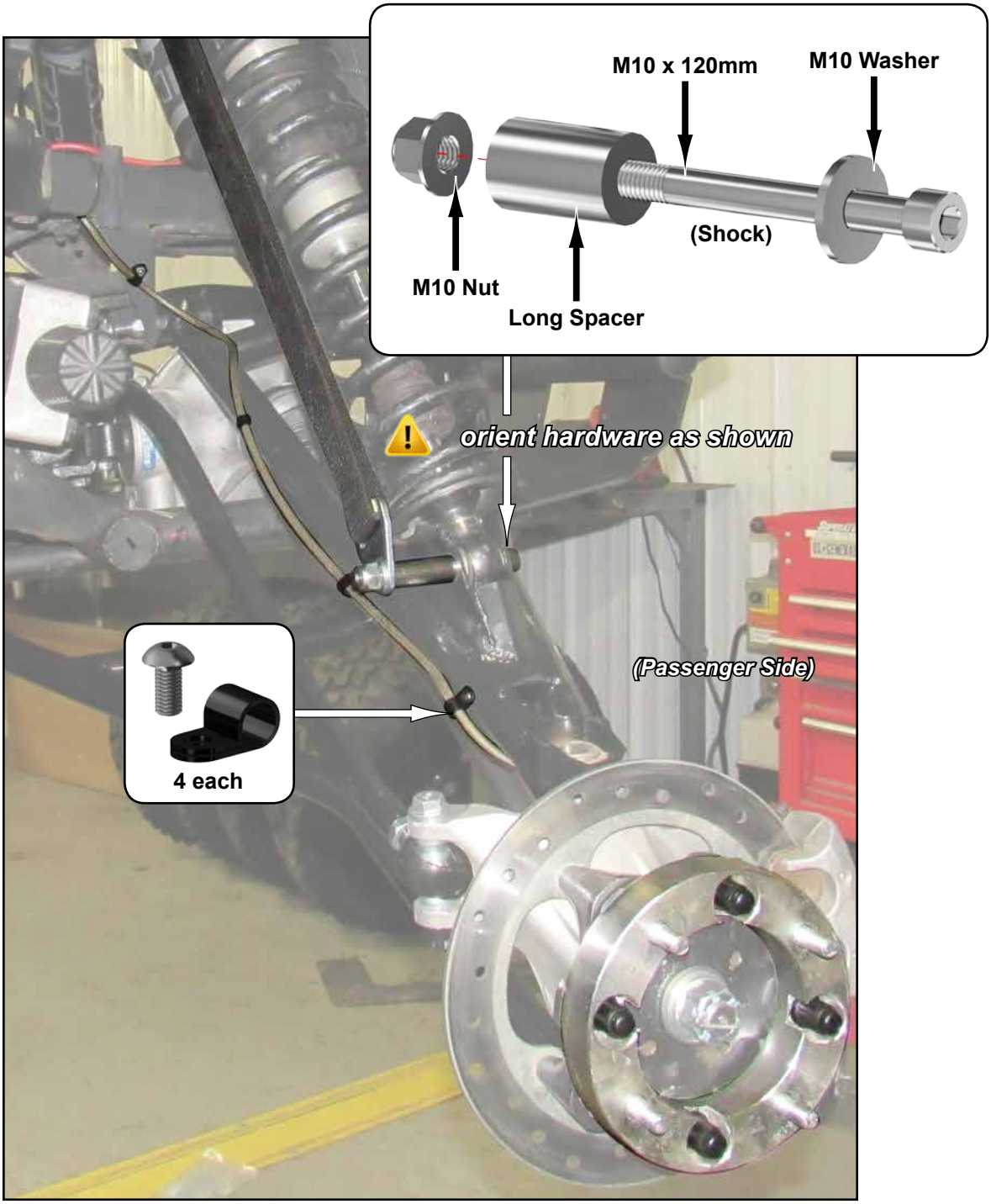

- Install provided Wheel Spacers.
- Secure Brake Lines with hardware shown.

Rear Spring Spacer:

- Remove Retaining Clip, Protector, and Spring.
- Install Spring Spacer and reinstall components.

- Install Trailing Arm with stock hardware.
- Install new Axles.
- Reinstall Knuckles with stock hardware.
- Reinstall Shocks to machine and Trailing Arms with stock hardware.

- Install Sway Bar Link to Trailing Arm and Sway Bar with stock hardware.

- Verify that Rods measure to dimensions shown.

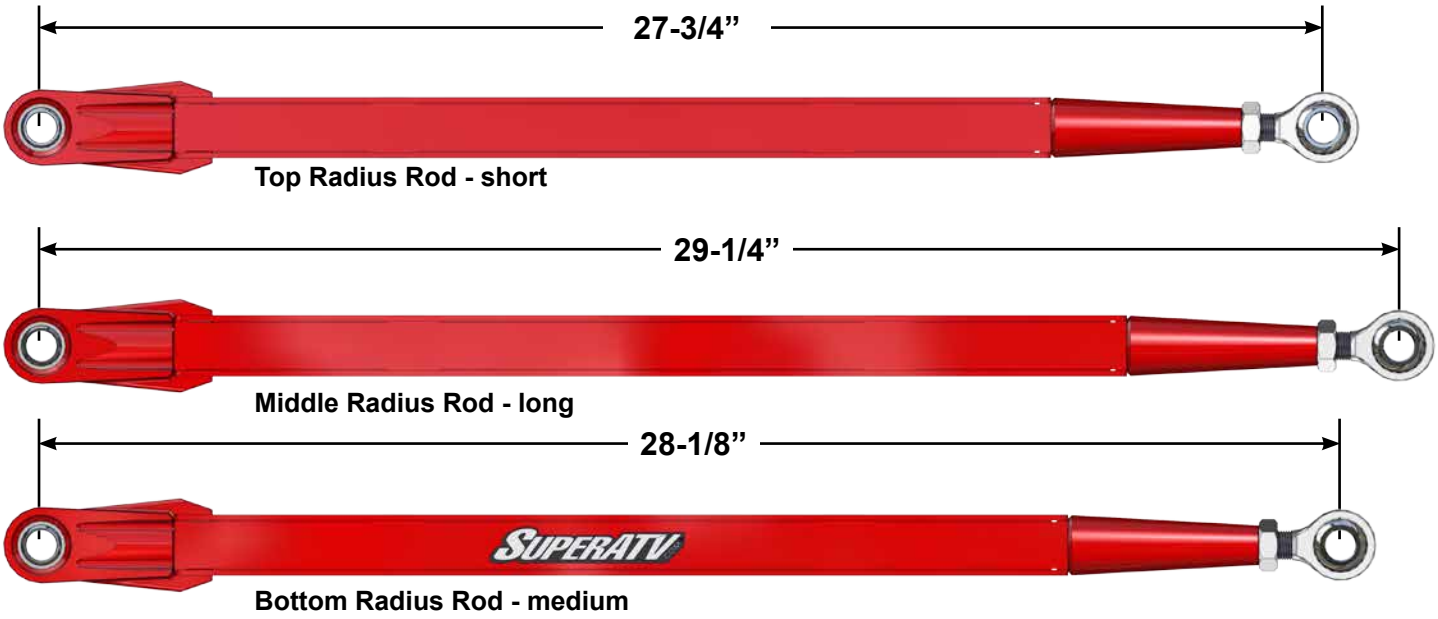

- Install Thick Bushings into Monoballs on side that will face Frame.

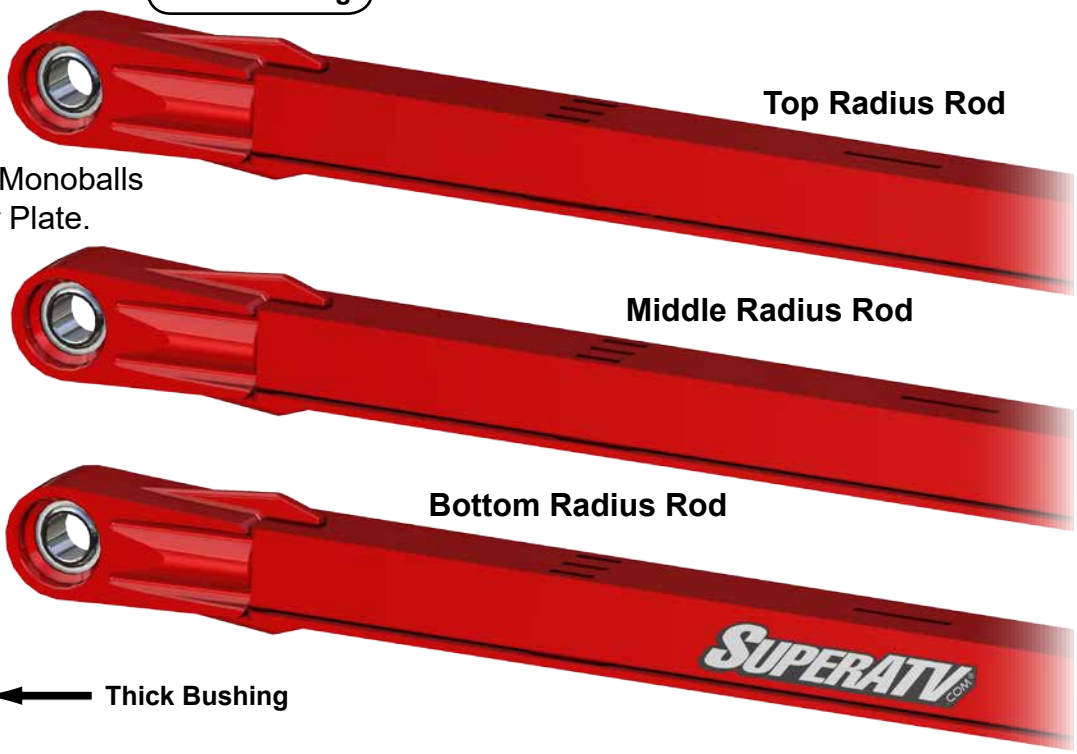

- Install Thin Bushings into Monoballs on side that will face Rear Plate.

(Passenger)

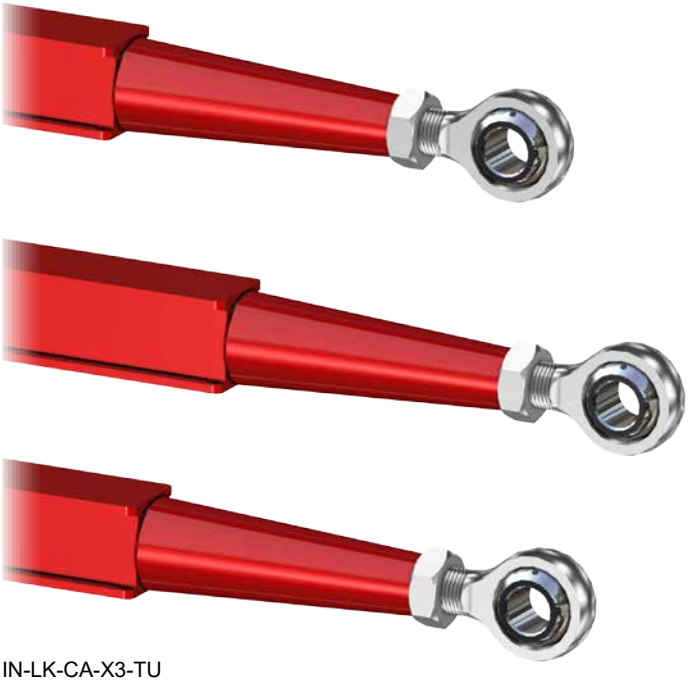

- Install Bushings to Outer Heim Joints.

- Install Top and Middle Radius Rods; use stock hardware on Knuckle and loosely use stock nuts on Frame.
- Repeat for opposite side.

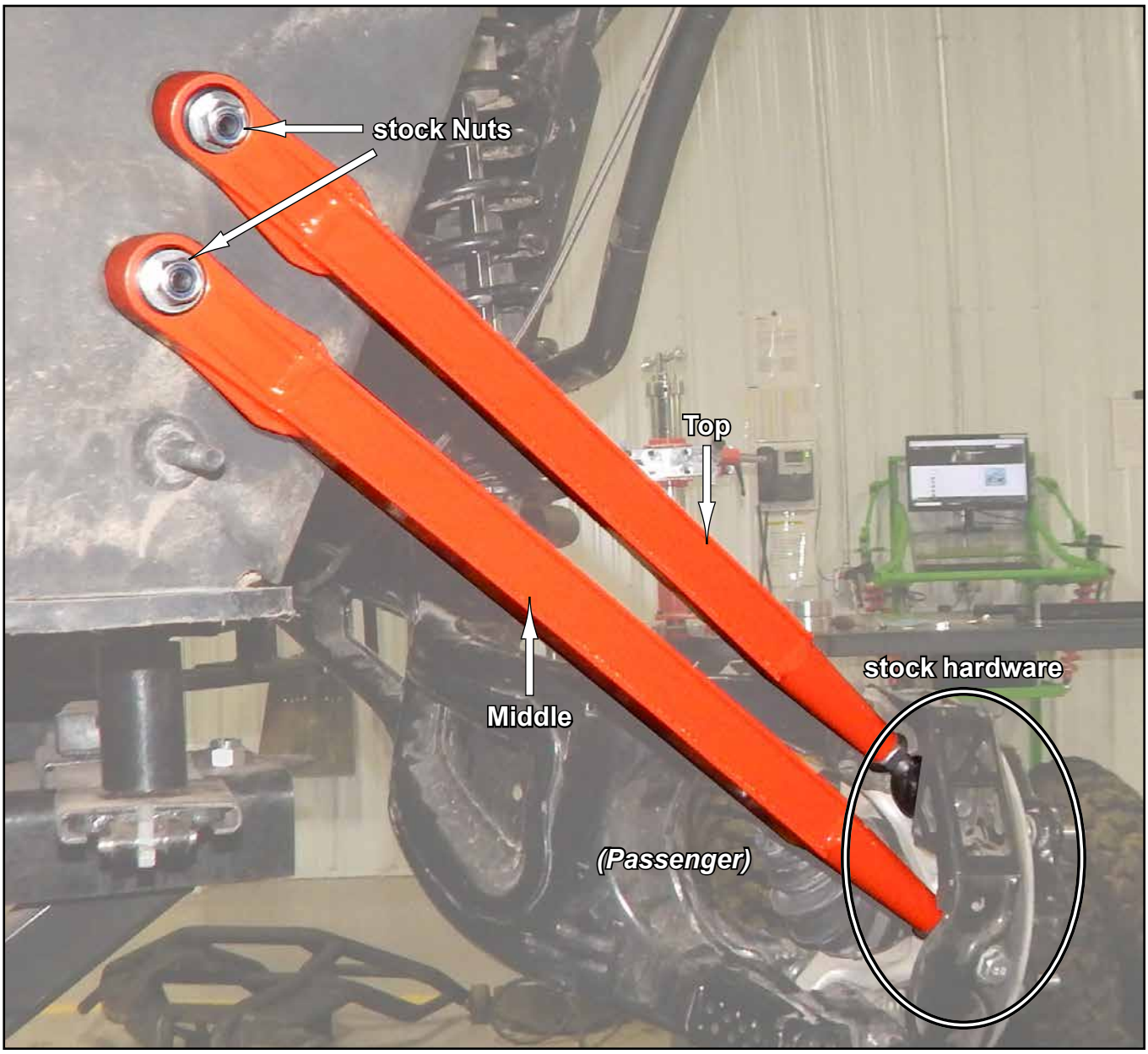

- Install Bottom Radius Arm; use stock hardware on Knuckle and loosely use stock nut on Frame.
- Repeat for opposite side.

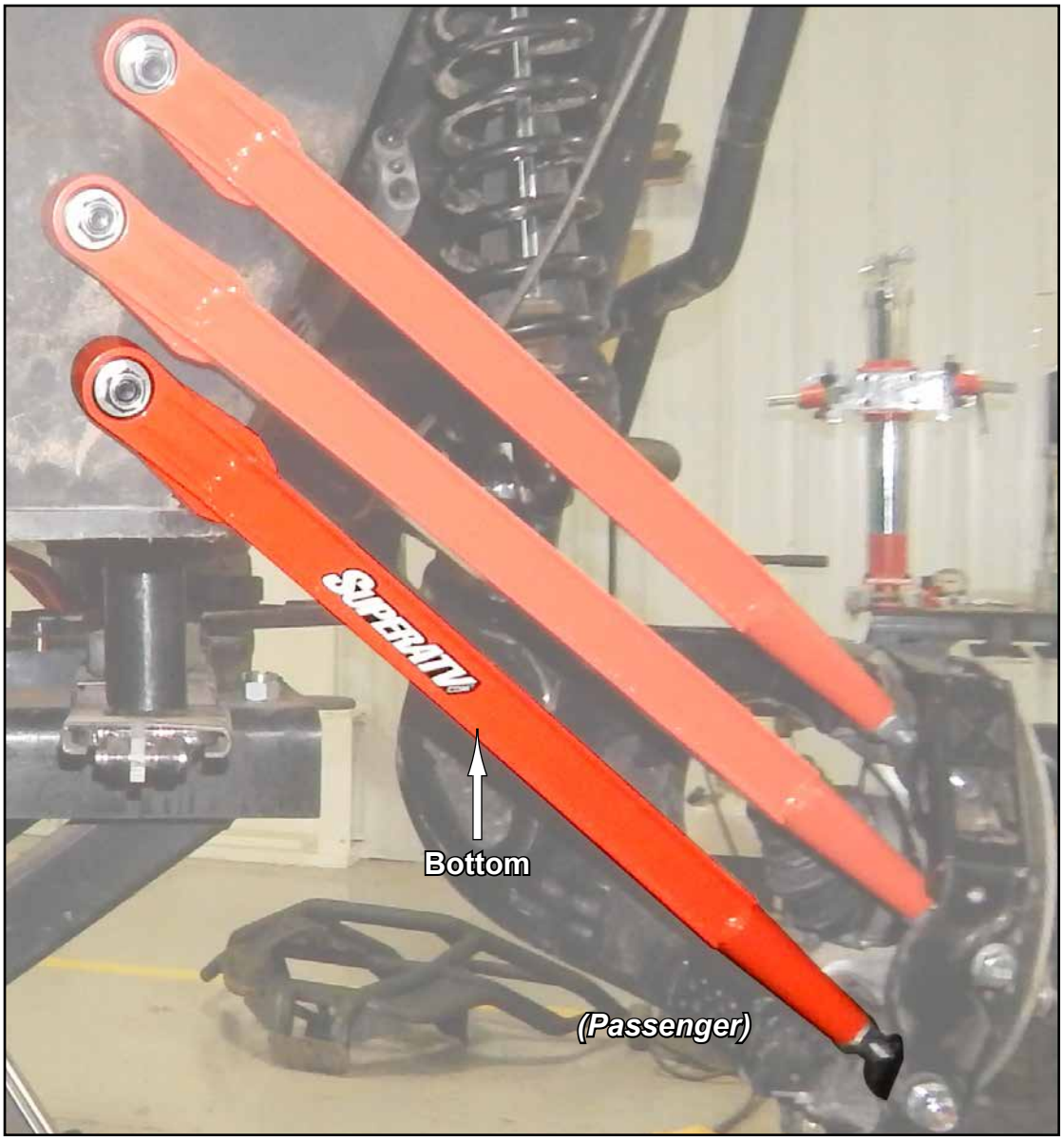

- Remove stock Nuts and install provided Rear Plate. Secure with provided M12 Nuts.

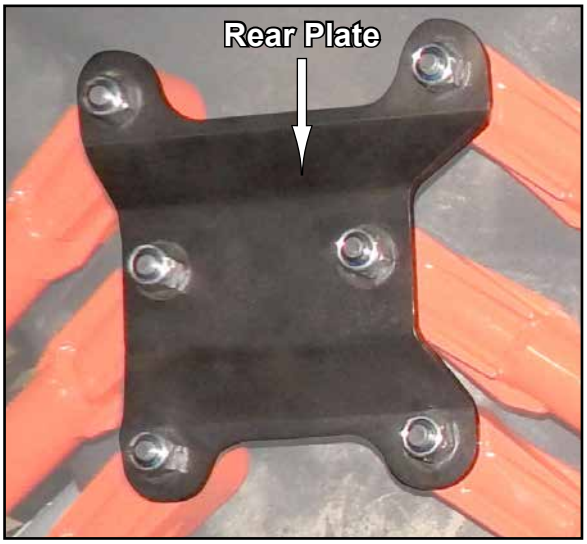

Tighten all hardware completely.

Rear Brake Lines:

Remove components shown on following pages.

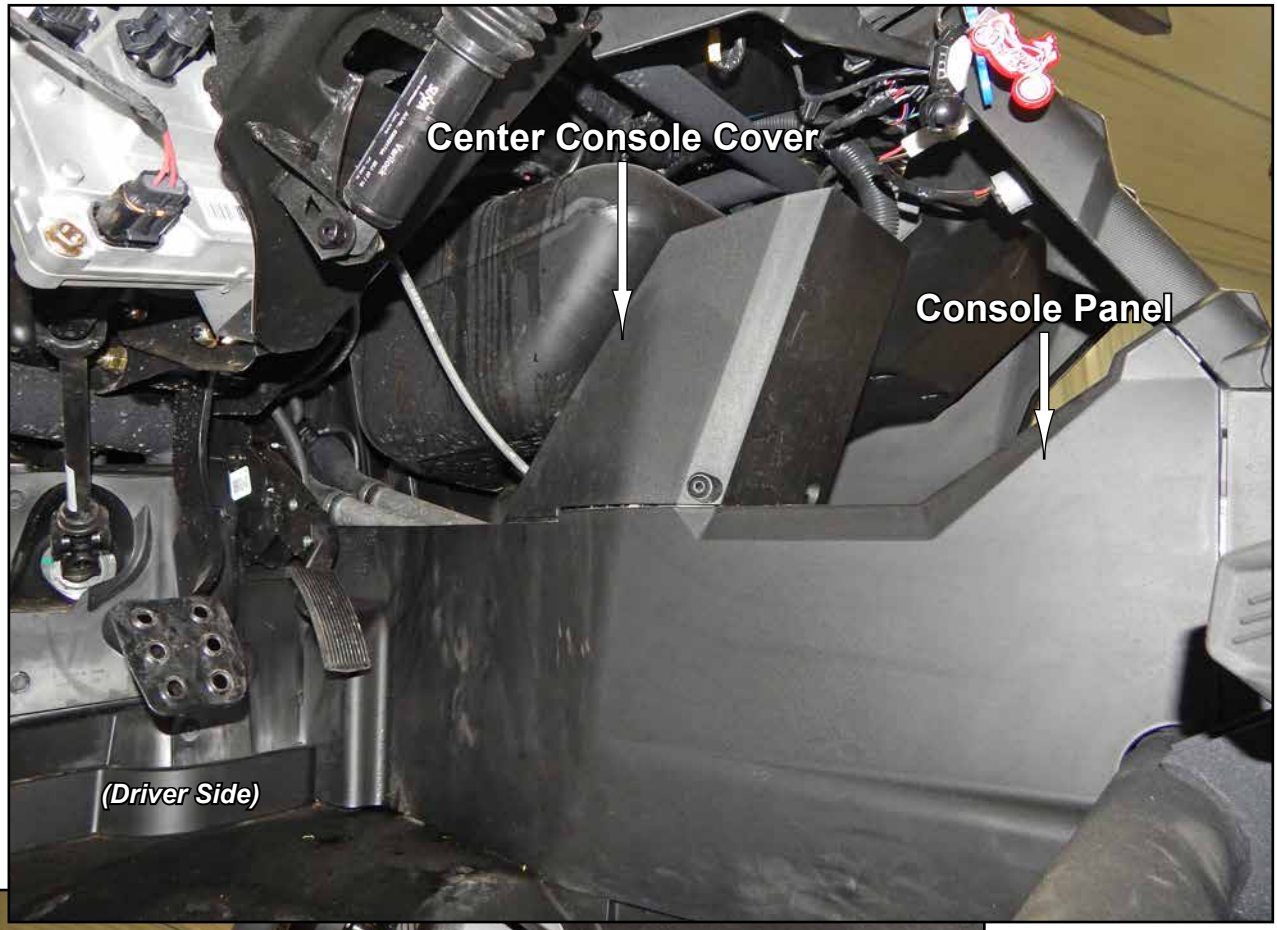

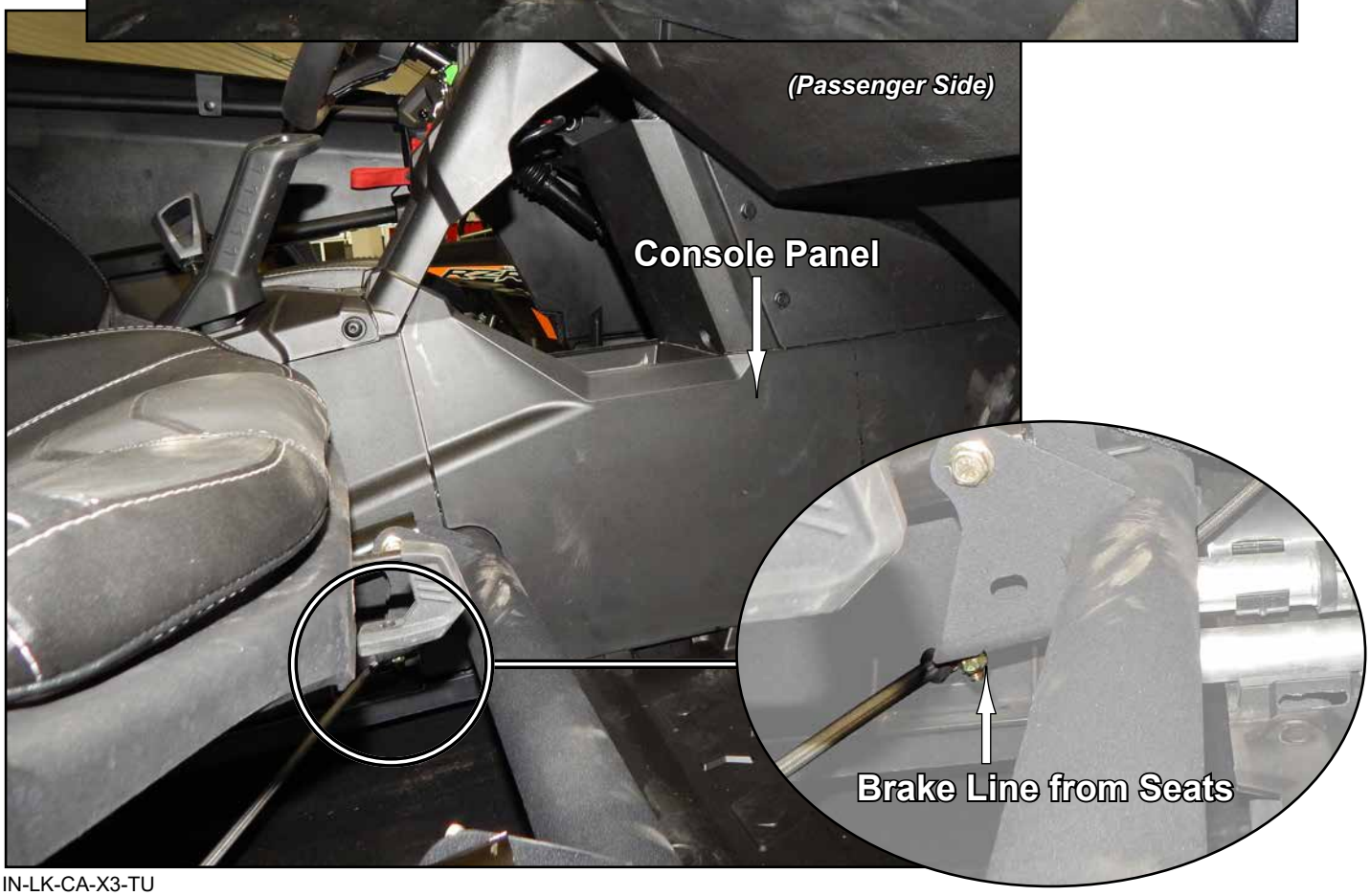

Rear Brake Lines continued:

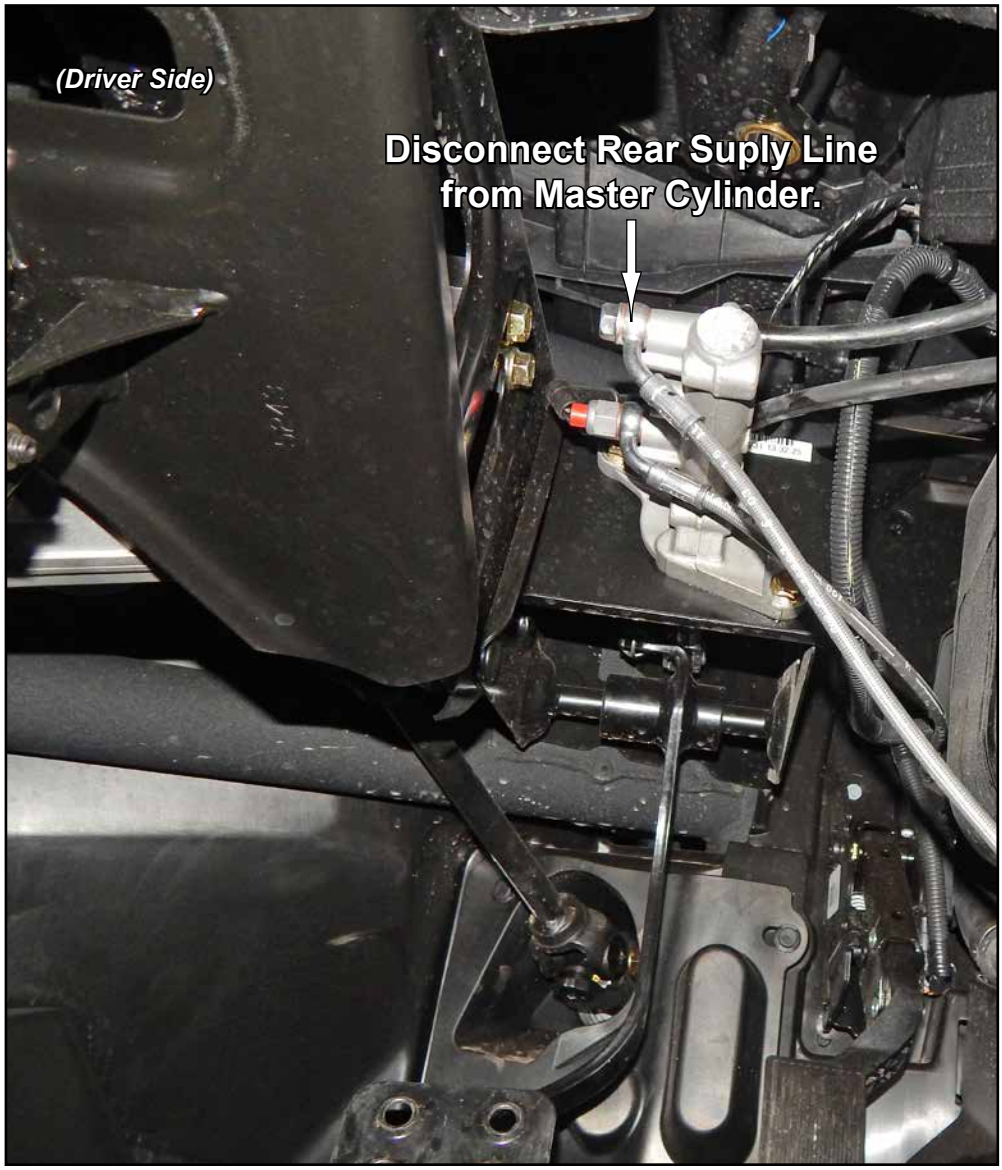

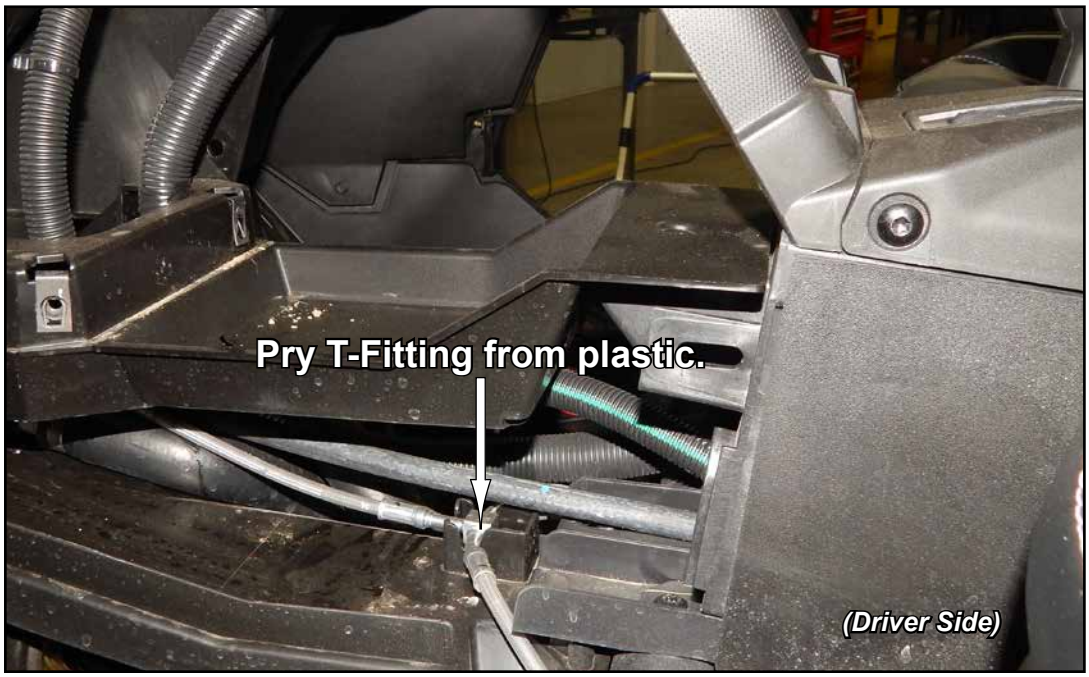

Rear Brake Lines continued:

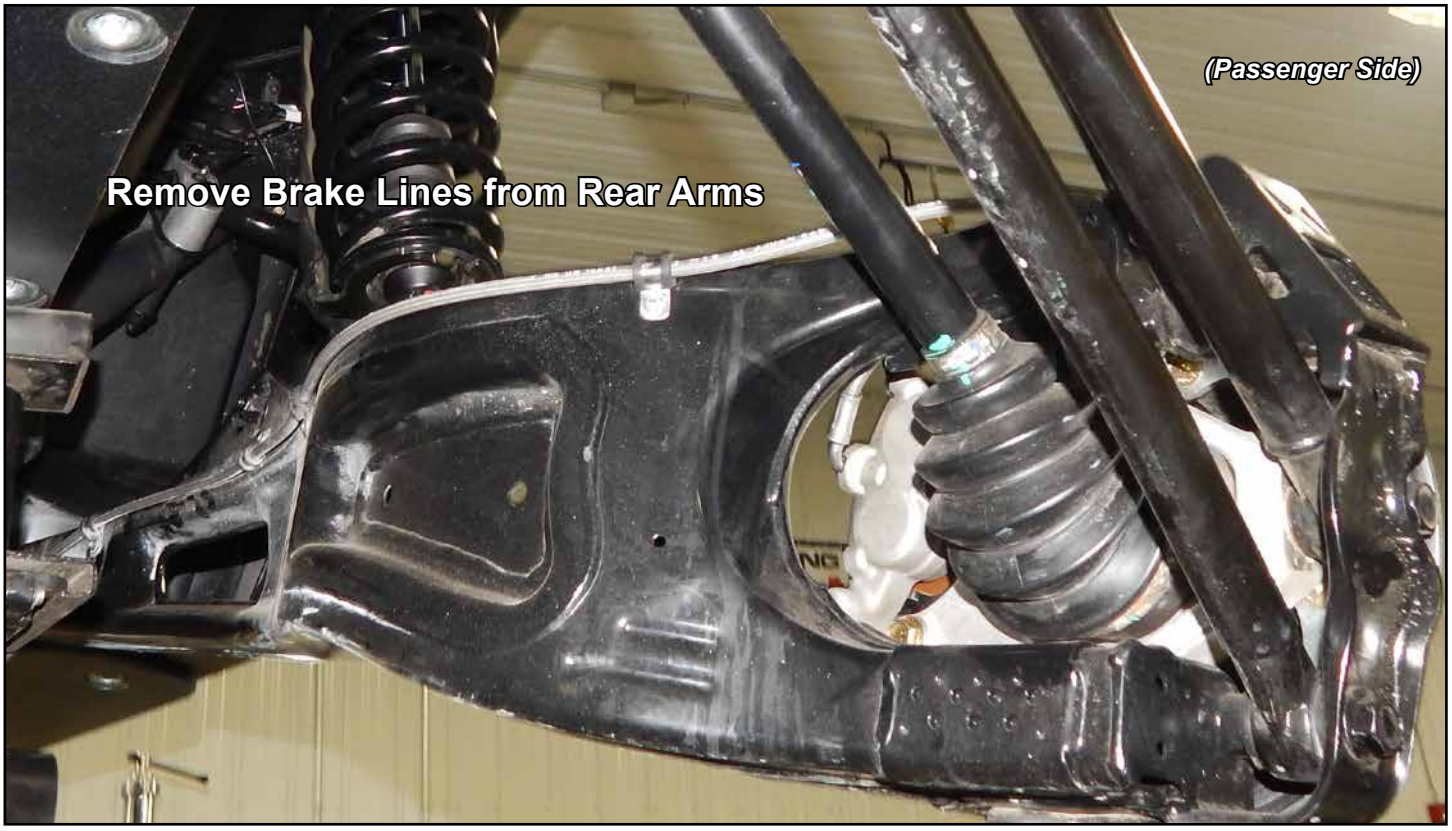

- Pull Rear Brake Lines from machine.

- Install provided Brake Lines to Master Cylinder and provided T-Fitting.
- Secure provided T-Fitting to stock location with hardware shown. T-Fitting Spacer goes under T-Fitting.
- Reinstall components previously removed.

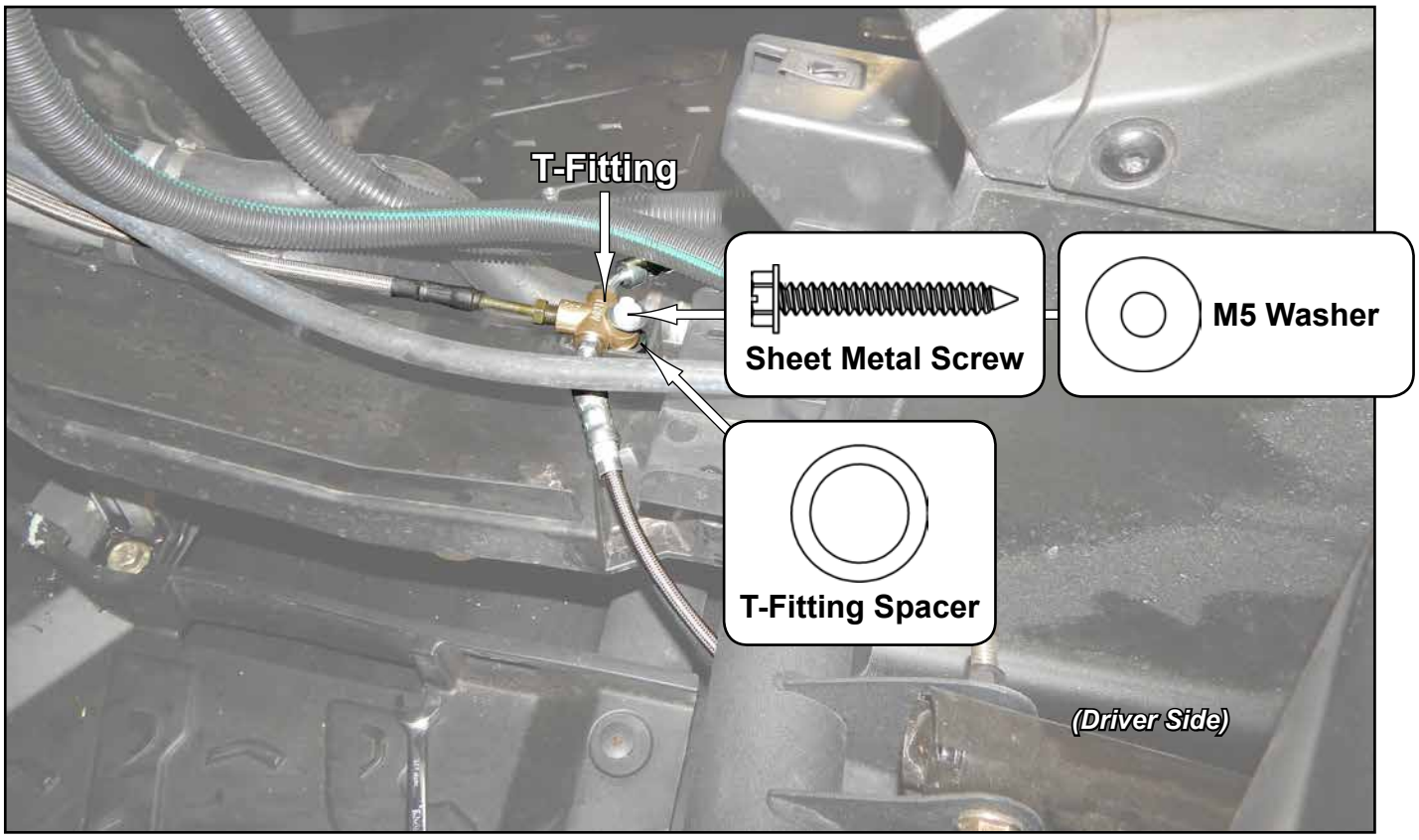

Rear Brake Lines continued:

- Route Rear Brake Lines from T-Fitting to Calipers.
- Follow stock Brake Lines path.
- Ensure that no binding, rubbing, or interference can occur.
- Secure to Trailing Arms with hardware shown.
- Bleed system.

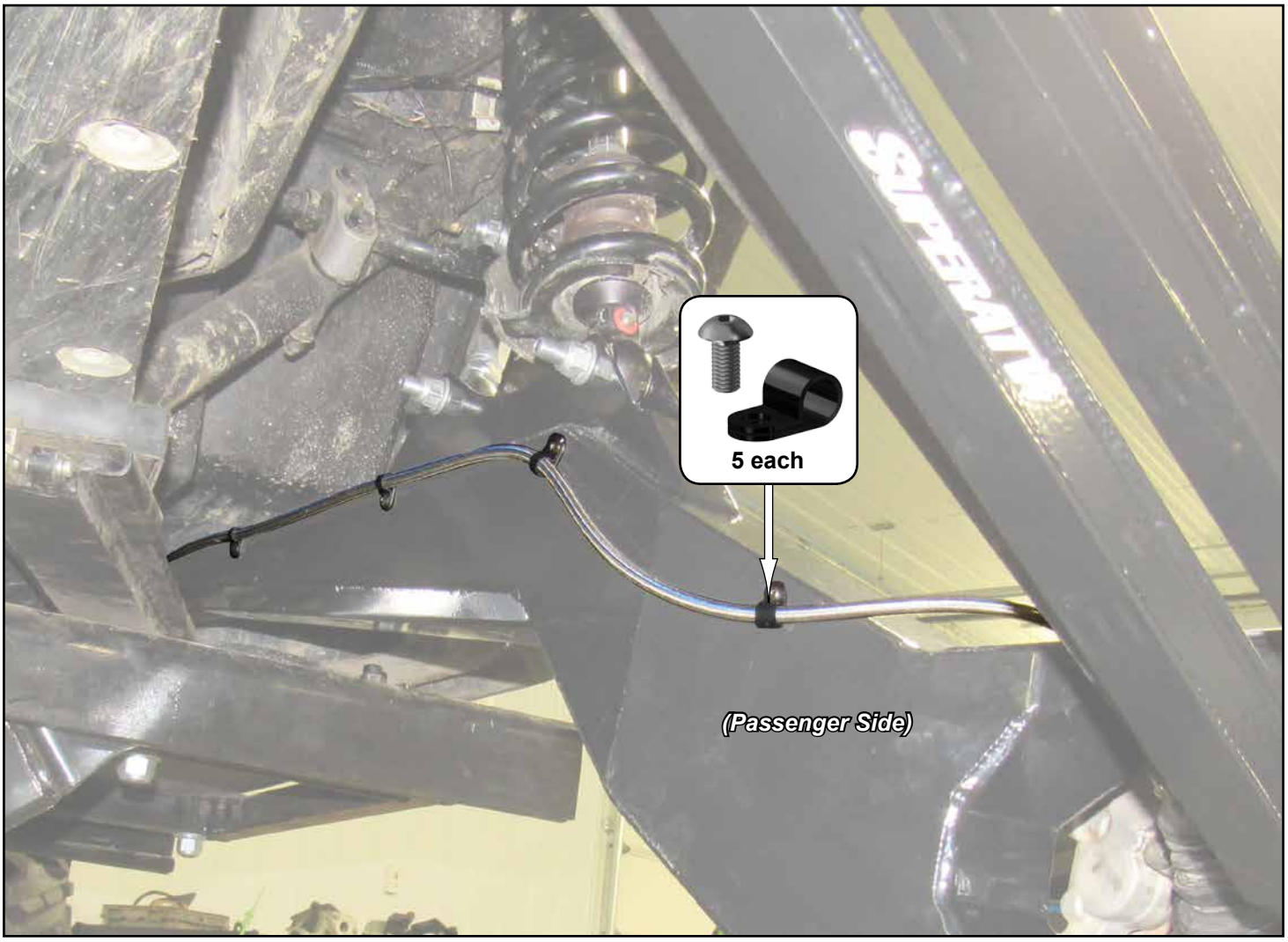

2753 Michigan Road • Madison, Indiana 47250 • 855-743-3427

INSTALLATION INSTRUCTIONS

Z-Bend Tie Rod Kit

Liability Statement

SuperATV's® products are designed to best fit user's ATV/UTV under stock conditions. Adding, modifying, or fabricating any factory or aftermarket parts will void any warranty provided by SuperATV® and is not recommended. SuperATV's® products could interfere with other aftermarket accessories. If user has aftermarket products on machine, contact SuperATV® to verify that they will work together.

Although SuperATV® has thousands of satisfied customers, user should be aware that installing lift kits, long travel, or suspension kits, tires, etc. will change the ride of machine and may increase maintenance and part wear. Operating any off-road machine while, or after, consuming alcohol and/or drugs increases risk of bodily harm or death. No warranty or representation is made as to this product's ability to protect user from severe injury or death. SuperATV® urges operators and occupants to wear a helmet and appropriate riding gear at all times.

By purchasing and installing SuperATV® products, user agrees that should damages occur, SuperATV® will not be held responsible for loss of time, use, labor fees, replacement parts, or freight charges. SuperATV®, nor any 3rd party, will not be held responsible for any direct, indirect, incidental, special, or consequential damages that result from any product purchased from SuperATV®. The total liability of seller to user for all damages, losses, and causes of action, if any, shall not exceed the total purchase price paid for the product that gave rise to the claim.

SuperATV® will warranty only parts provided by SuperATV®. Any damage or problems with OEM housings, bearings, seals, or other manufacturers' products will not be covered by SuperATV®. SuperATV® parts and products are not warrantied if item was not installed properly, misused, or modified.

Installing, adding, modifying, or fabricating any factory or aftermarket product to your ATV/UTV may violate certain local, state, and federal laws. Be advised that laws vary depending on town, city, county, state, etc. Use of certain products on public streets, roads, or highways may be in violation law. The Buyer is solely and exclusively legally and personally responsible for any violation of the law by the installation or use of the product. You must abide by all local, state, and federal laws, including but not limited to vehicle safety, traffic laws, and ordinances. It is your responsibility to know the laws and how they apply to you.

The Buyer is responsible to fully understand the capability and limitations of his/her vehicle according to manufacturer specifications, warnings and instructions and agrees to hold SuperATV® harmless from any damage resulting from failure to adhere to such specifications, warnings and/ or instructions. The Buyer is also responsible to obey all applicable federal, state, and local laws and ordinances when operating his/her vehicle while using this product, and the Buyer agrees to hold SuperATV® harmless from any violation thereof.

Need help with your installation?

sales@superatv.com
www.superatv.com
1-855-743-3427
8:00am - 9:00pm EST M-Th
8:00am - 7:00pm EST Friday
9:00am - 2:00pm EST Saturday

Read instructions and view illustrations before beginning.

Thank You For Choosing

© 2019 SuperATV.com®. All Rights Reserved.

IN-TRRA-CA-X3-Z6-14 1/24/2019

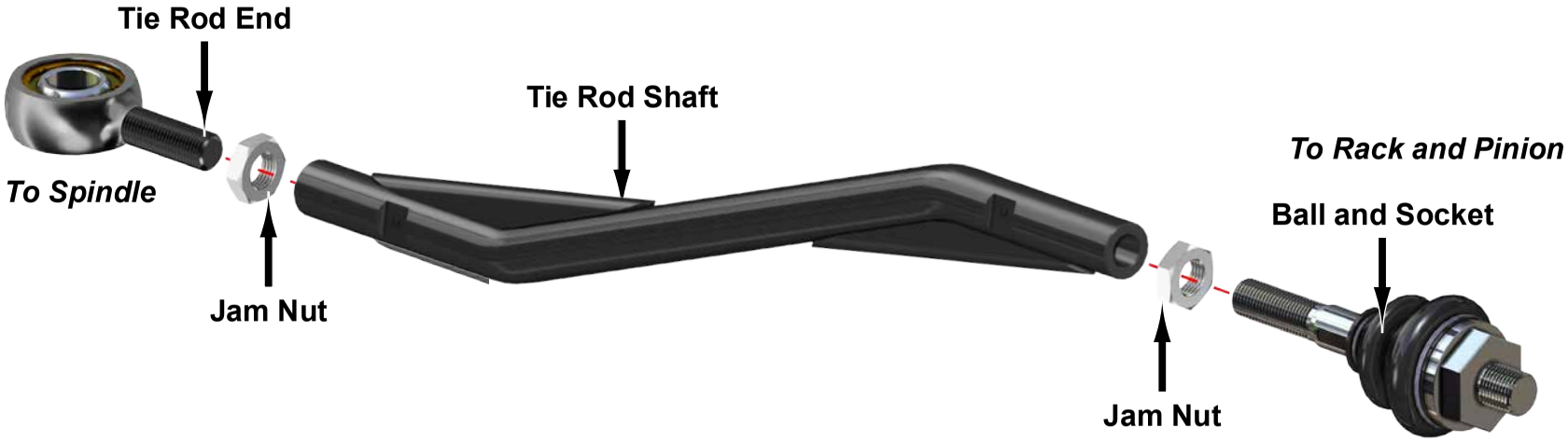

- Install Ball and Sockets to Rack and Pinion. Use Loctite.
- Install Tie Rod Shafts to Ball and Sockets.
- Install Tie Rod Ends to Tie Rod Shafts
- Secure Tie Rod Ends to same location as stock on Spindles with hardware shown.

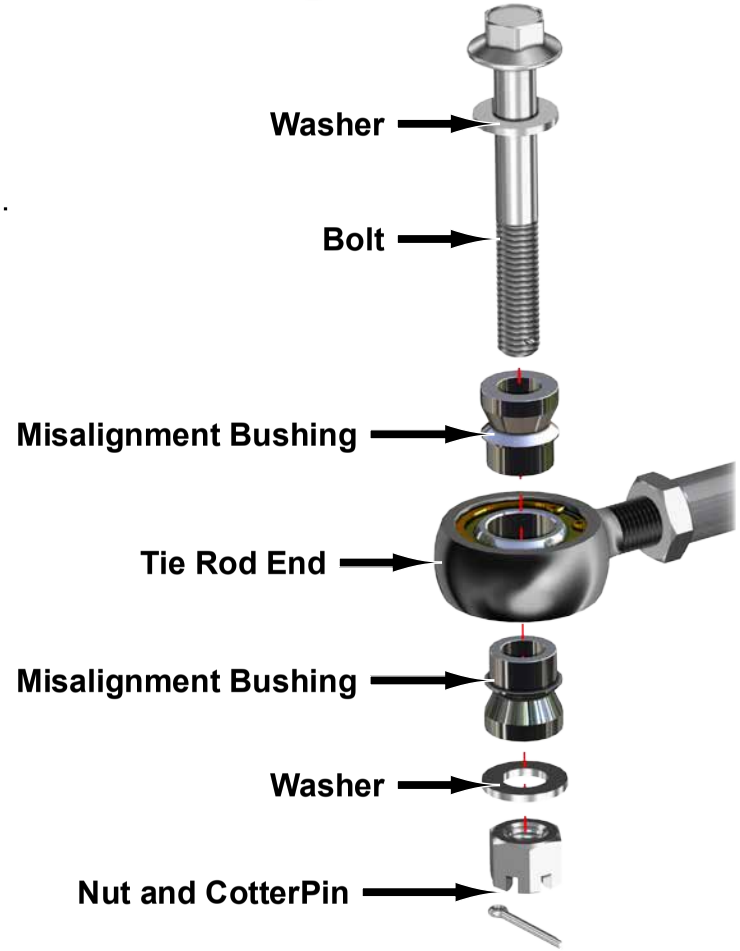

- Before initial ride, set toe of vehicle.
- Rack and Pinion can move freely. Have a helper hold Steering Wheel while adjusting Toe.
- After initial ride check to see that hardware remained tight.

CAMBER

- **Tires must have equal air pressure before making adjustments.**
- **Adjustments to be made after all suspension components have been completely assembled.**
- **Tires must not be in contact with ground when making adjustments.**
- **Perform adjustments in small increments.**

Adjusting Camber:

- Remove A-Arms from Frame and turn Pivot Blocks to adjust camber. Reinstall Arms.
- Lower machine and settle suspension components by rolling machine back and forth several feet at a time.
- Check settings and make small adjustments as needed.
- Each time an adjustment is made, machine must be rolled back and forth to settle suspension components.
- Once desired setting is achieved, tighten hardware completely. Loc-tite on Nuts is recommended.

A NEGATIVE CAMBER SETTING OF 1° to 2° IS RECOMMENDED.

LOWER:
Too much positive camber: adjust Pivot Blocks *OUT*.
Too much negative camber: adjust Pivot Blocks *IN*.
note: 2 full turns is 1°
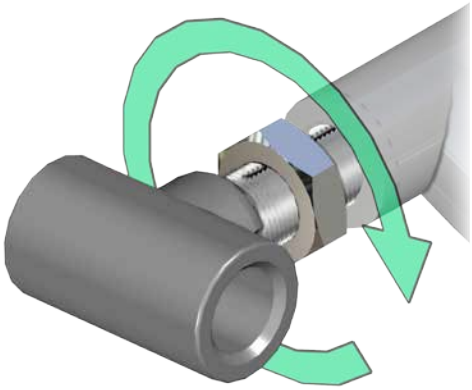
UPPER A-ARMS:
Too much positive camber: adjust Pivot Blocks *IN*.
Too much negative camber: adjust Pivot Blocks *OUT*.
note: 2 full turns is 1°