DOWNLOAD ENHANCED INSTALL MANUALS AT dieselperformance.com

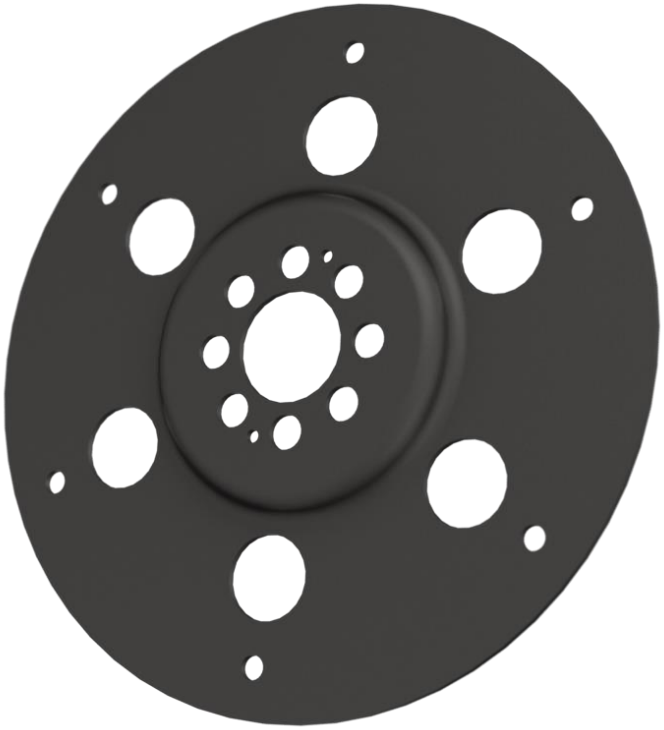

BD Duramax Flexplate

2500 / 3500 Automatic Transmissions 2001 - 2012

P/N#	1041260

PLEASE READ ALL INSTRUCTIONS BEFORE INSTALLATION

BD Engine Brake Inc.
Plant Address: 33541 MacLure Rd. Abbotsford, BC, Canada V2S 7W2
U.S. Shipping Address: 88-446 Harrison St, Sumas, WA 98295 U.S. Mailing Address: P.O. Box 231, Sumas, WA 98295
Phone: 604-853-6096 | Fax: 604-853-8749 | Internet: www.bd-power.com

K I T C O N T E N T S :

Please check to make sure that you have the part listed in this kit ***before*** you start the disassembly of your truck.

1401260
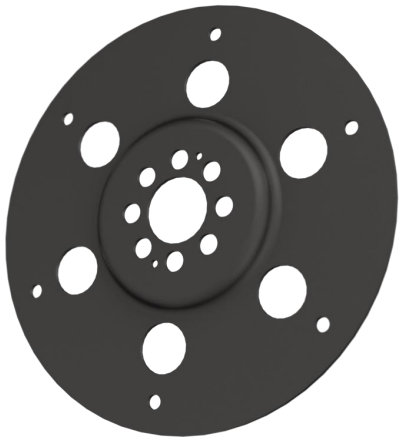
Duramax Flexplate
Qty: 1

WELCOME

Thank you for purchasing a BD Duramax Flex Plate. Installation should occur on a vehicle properly secured to prevent rolling.

TABLE OF CONTENTS

REQUIRED TOOLS.....2
INSTALLATION.....3

REQUIRED TOOLS

- Torque Wrench > 60 ft/lbs
- 8 Fly Wheel Bolts (GM Part # 97226126 (45mm in length))
- 1/2” Drive Long Handle Breaker Bar
- GM J45059 tool (optional)
- 14mm Allen head socket

INSTALLATION

VEHCILE SHOULD BE SAFELY SECURED BEFORE INSTALLATION.

1. Remove or slide back the transmission. If you unfamilar with this process please consulant a Mitchel or GM service manual.
2. Remove and discard the 8 flywheel bolts.
3. Remove the flywheel washer and flywheel assembly.
4. Discard the OE flexplate.
5. Install BD Flexplate onto OE flywheel. Ensure dowel pin is inserted into dowel hole.
6. Install flywheel washer on the BD flexplate (Ensure the beveled side of the washer is facing the engine).

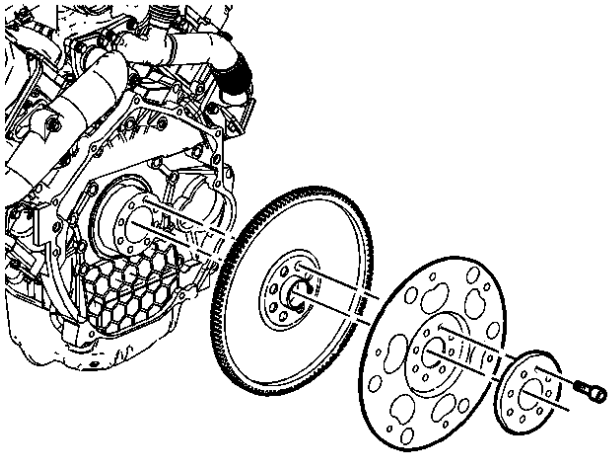

7. Using new bolts (14mm Allen Head), install assembly to engine. Follow the correct torque sequence.
   a. GM Part# for bolts #97226126 (45mm in length)

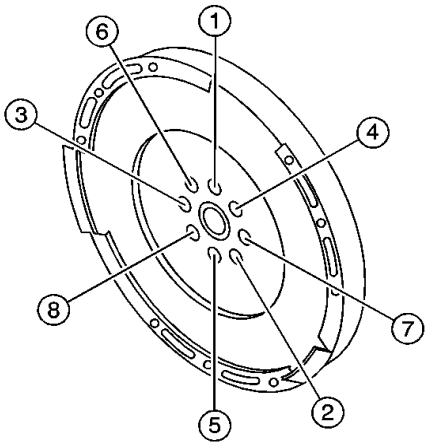

	Torque Values
1st Pass	Tighten bolts to 58 lbft (79Nm)
2nd Pass	Torque an additional + 60° (Using J45059 GM Tool, angle gauge and large bar)
3rd Pass	Torque an additional + 60° (Using J45059 GM Tool, angle gauge and large bar)

The GM J45059 tool is available from GM if you do not have this tool you will have to prevent the engine from rotating.

8. Remove the locking tool (J45059) and reinstall the transmission. Note that the torque convertor mounting bolts should be torqued to 44 ftlbs using a criss cross method with (blue) loctite.

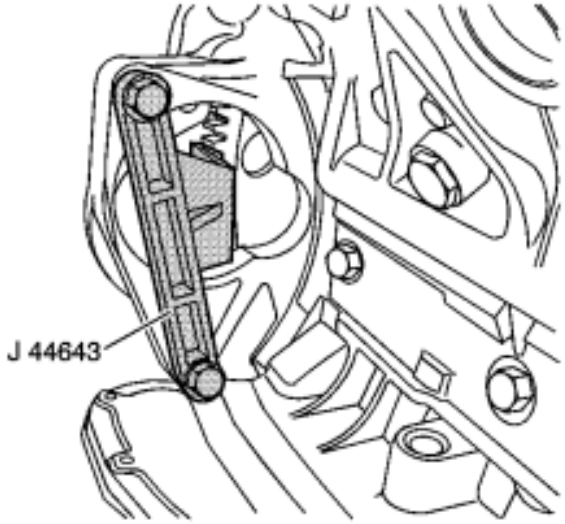

Please note this product is SFI 29.3 certified. This certification is good for 3 years from the manufacturing date of the product. This date is marked on the SFI sticker.

If you have any technical difficulties, concerns, comments, or complaints, please phone our Technical Support hotline at (800) 887-5030 between 8:30am-5:00pm PST (Pacific Standard Time) Monday to Friday.

BD ENGINE BRAKE, INC.
Plant Address: A10-33733 King Rd, Abbotsford, BC, Canada V2S 7M9
US Shipping Address: 88-446 Harrison St, Sumas, WA 98295 US Mailing Address: PO Box 231, Sumas, WA 98295
Phone: 604-853-6096 Fax: 604-853-8749 Internet: www.bd-power.com