S5016

03-07 CHEV SILVERADO/ GMC SIERRA 1500, 4.8L/5.3L EC/CC SB, DUAL REAR EXIT

MBRP INC.
PERFORMANCE EXHAUST

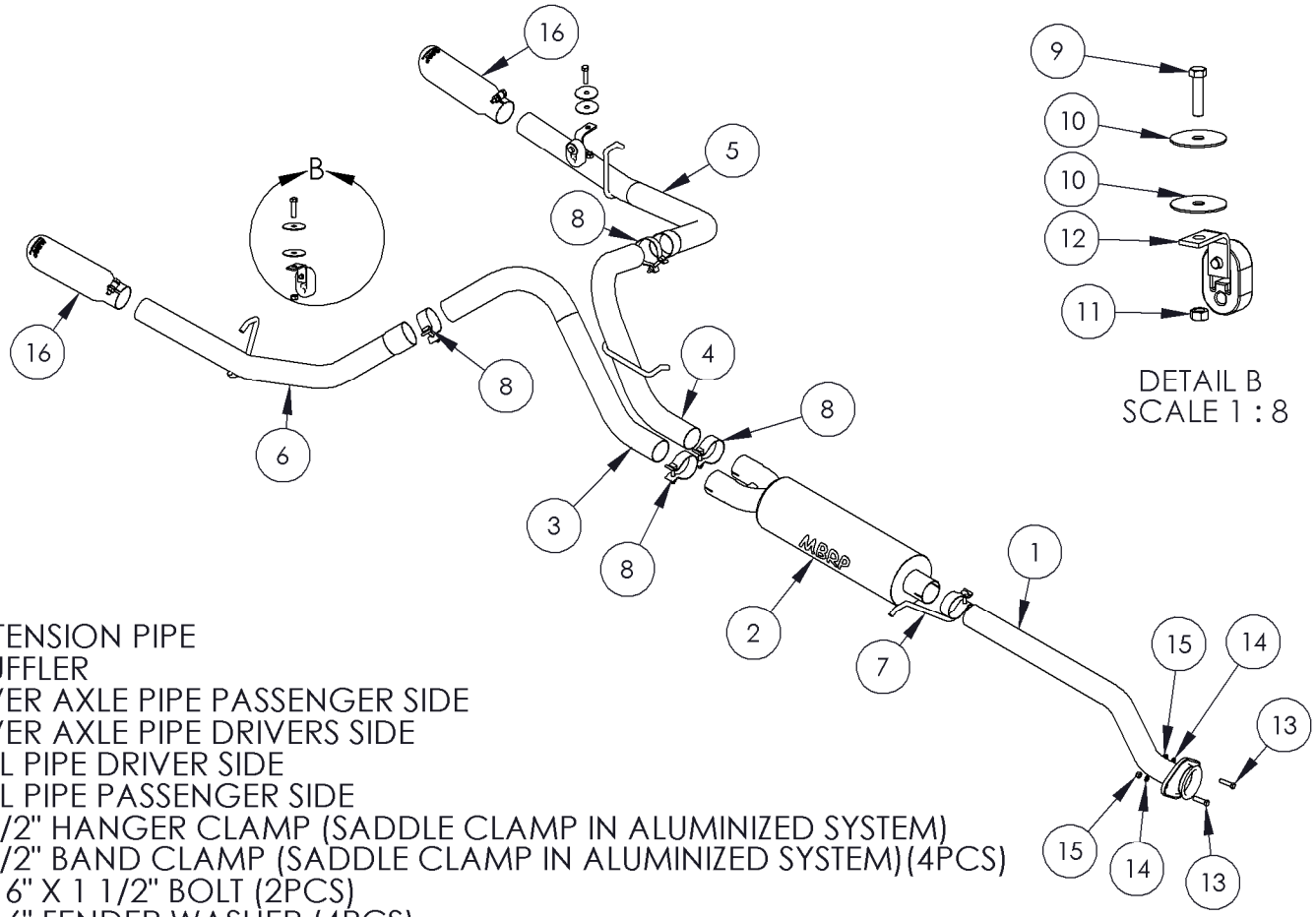

1. EXTENSION PIPE
2. MUFFLER
3. OVER AXLE PIPE PASSENGER SIDE
4. OVER AXLE PIPE DRIVERS SIDE
5. TAIL PIPE DRIVER SIDE
6. TAIL PIPE PASSENGER SIDE
7. 2 1/2" HANGER CLAMP (SADDLE CLAMP IN ALUMINIZED SYSTEM)
8. 2 1/2" BAND CLAMP (SADDLE CLAMP IN ALUMINIZED SYSTEM)(4PCS)
9. 7/16" X 1 1/2" BOLT (2PCS)
10. 7/16" FENDER WASHER (4PCS)
11. 7/16" NUT (2PCS)
12. HANGER ASSEMBLY (2PCS)
13. 3/8" X 1 1/2" BOLT (2PCS)
14. 3/8" LOCK WASHER (2PCS)
15. 3/8" NUT (2PCS)
16. EXHAUST TIP (2PCS)

PLEASE READ BEFORE STARTING INSTALLATION

While MBRP Inc. has made every effort to ensure that all components of this system are of superior quality and properly packaged, it is the installer's responsibility to ensure the following before removal of the factory exhaust:

- that ALL components shown above are present.
- that ALL mating components fit together.
- that there are no damaged components.
- that the system you have purchased is appropriate for your vehicle year, model and configuration.
- that the system will not interfere with any modifications previously installed or planned.
- that you have read and understand these instructions.

If you have any questions or are uncertain about any aspect of the installation of this system to your vehicle please contact your dealer before commencing installation.

03-07 Chev./GMC Silverado/Sierra 4.8L/5.3L

"COOL DUALS"™

Removal of stock system:

1. Apply a penetrating lubricant liberally to all exhaust fasteners, hangers and rubber insulators.
2. Remove the nuts from the studs holding the front flange together and disconnect exhaust system.
3. Remove the hangers from the rubber insulators and remove the exhaust from the vehicle. If a hoist or hydraulic lift is not being used the tail pipe may need to be cut to clear the rear axle.
4. The studs located in the exhaust flange must be removed. This can be accomplished using a hammer. The studs will be replaced by hardware supplied with the system.

Installation of MBRP Inc. Performance Exhaust:

1. Loosely attach the extension pipe at the flange using the hardware provided.
2. Install muffler onto extension pipe with the outlets horizontal. Loosely install the hanger clamp around the front muffler joint and into the factory rubber insulator located on the frame near the front of the muffler.
3. Loosely install the driver side over axle pipe connecting it to the outlet closest to the drive shaft. Install the hanger into the rubber insulator located above the muffler outlets.
4. Feed the passenger side over axle pipe over the axle and install it loosely.
5. Feed the expanded end of the driver side tail pipe from the rear of the vehicle over the axle, around the outside of the shock absorber and connect it to the driver side over axle pipe.
6. Move the driver side tail pipe into approximate position. Using the factory hole provided in the frame located directly above the tail pipe hanger, attach the hanger provided using the supplied hardware.
7. Feed the expanded end of the passenger side tail pipe from the rear of the vehicle over the axle and loosely connect it to the passenger side over axle pipe.
8. Move the passenger side tail pipe into approximate position. Using the factory hole provided in the frame located directly above the tail pipe hanger, attach the hanger provided using the supplied hardware.
9. Install the mirror polished tips. It is recommended to install them at this point to assist with the final system alignment.
10. Install provided clamps to the pipe connections where required. Align the exhaust as required before tightening clamps.
11. Starting at the front of the exhaust tighten all clamps and connections.
12. Check along the whole length of the exhaust system to ensure that there is adequate clearance around the spare tire, fuel and brake lines or any wiring. If any interference is detected relocate or adjust.

Congratulations! You are ready to begin enjoying the improved performance and driving experience of your MBRP Inc. Cool Duals system. We hope you enjoy your purchase.