INSTALLATION GUIDE

AMP RESEARCH Power Step

MADE IN USA

APPLICATION	MODEL YR	PART #
Nissan Armada	2004 - up	75110-01A
Nissan Titan Crew Cab	2004 - up	75110-01A
Nissan Titan King Cab*	2004 - up	75110-01A

***Modification required to running board assembly. See Item 1 on page 2.**

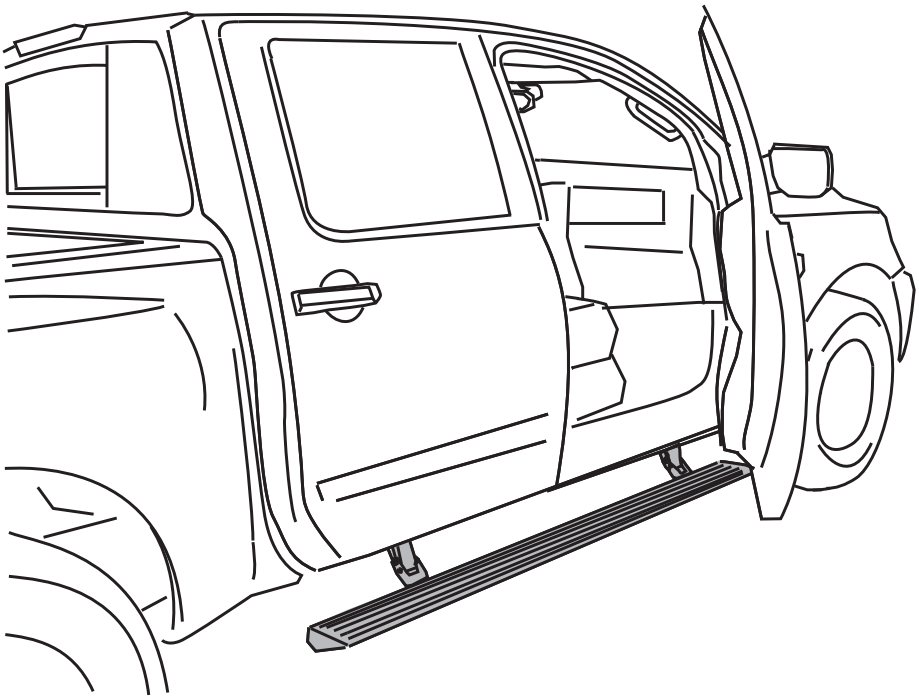

INSTALLATION TIME

3 - 5 hrs

SKILL LEVEL

1 2 3 4

4= Experienced

TOOLS REQUIRED

- ❑ Safety goggles
- ❑ Measuring tape
- ❑ Flat blade screwdriver
- ❑ Phillips head screwdriver
- ❑ 13 mm socket
- ❑ 12 mm socket
- ❑ 10 mm socket
- ❑ 14 mm end wrench
- ❑ 13 mm end wrench
- ❑ Ratchet wrench and extension
- ❑ Wire crimpers
- ❑ Wire stripper/cutter
- ❑ 3/16” hex key wrench (allen wrench)
- ❑ 5 mm hex key wrench (allen wrench)
- ❑ 4 mm hex key wrench (allen wrench)
- ❑ Electrical tape

AMP RESEARCH TECH SUPPORT 1-888-983-2204 (Press 2) Monday - Friday, 6:00 AM - 5:00 PM PST

Designed and manufactured by AMP Research®. Patent Number 6,830,257; 6,641,158; 6,834,875; 6,938,909; 6,942,233; 7,007,961; 7,055,839; 7,163,221; 7,367,574; 7,380,807; 7,398,985; 7,413,204; 7,487,986. Other US and Worldwide patents pending. Made in USA © 2010 AMP Research
5-year limited warranty. Professional installation is recommended.

Note: Some Applications require modification.

Application	Cut Length
Crew Cab / Armada	72” (No Modification Required)
King Cab	60” (Trim 12”)

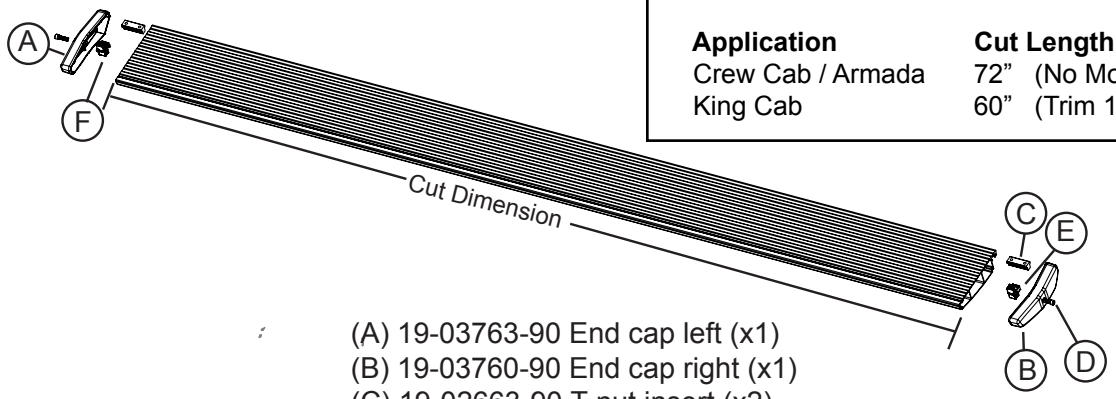

(A) 19-03763-90 End cap left (x1)
(B) 19-03760-90 End cap right (x1)
(C) 19-02663-90 T-nut insert (x2)
(D) 19-02802-90 Socket cap screw (x2)
(E) 19-03761-90 End cap wedge right (x1)
(F) 19-03764-90 End cap wedge left (x1)

1 x2
Running board assembly

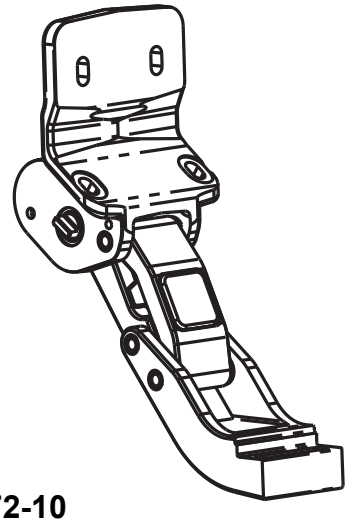

2 x2
10-03072-10
Motor Linkage Assembly

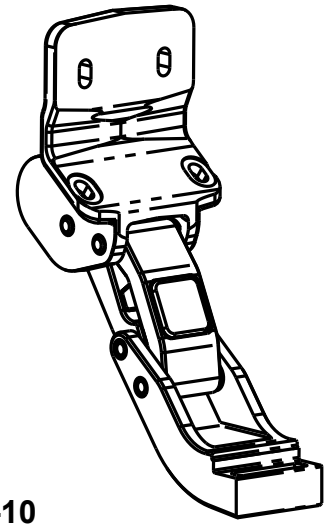

3 x2
10-03073-10
Idler Linkage Assembly

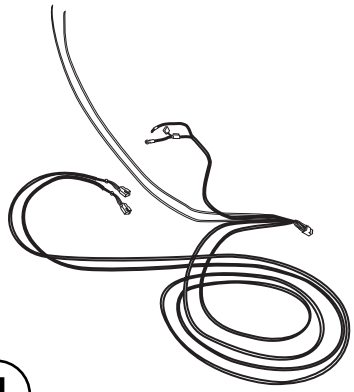

4
19-03082-91
Wire Harness

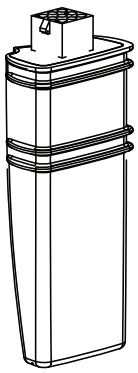

5
19-03297-93
Controller

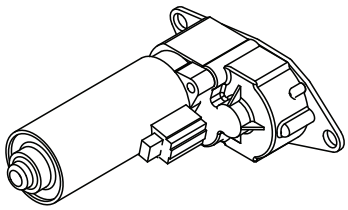

6 x2
20-03289-92
Motor

PARTS LIST AND HARDWARE IDENTIFICATION

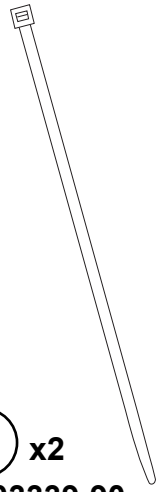

7 x2
19-03339-90
Cable Tie 11”

8 x4
16-03014-90
Washer Block

9 x4
19-02845-90
Hex Nut

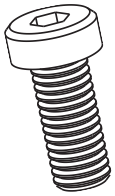

10 x6
19-03076-90
Socket Cap Screw

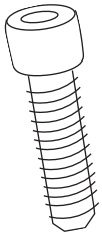

11 x8
19-02802-90
Socket Cap Screw

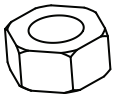

12 x4
19-03353-90
Nylock Nut

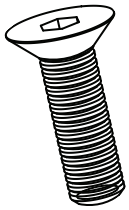

13 x4
19-03352-90
Flat Head Cap Screw

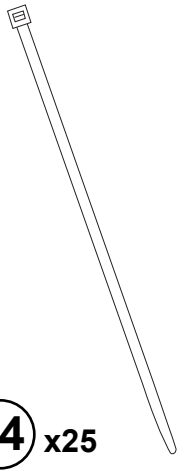

14 x25
19-02805-90
Cable Tie 7”

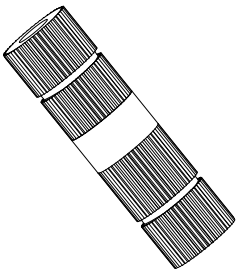

15 x4
19-03354-90
Posi-Tap™

16 x4
19-02822-90
Rivet

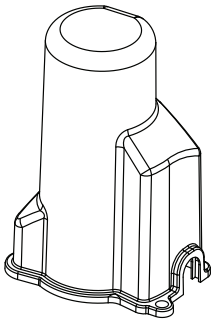

17 x2
19-03238-90
Motor Cover

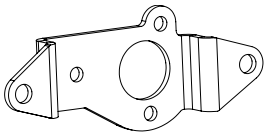

18 x2
19-02903-90
Motor Bracket

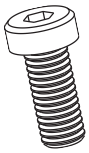

19 x6
19-02903-90
Socket Cap Screw

Attach the linkage assemblies with supplied hardware at the first and third set of attachment points.
The Idler linkage will be mounted in the first attachment point.

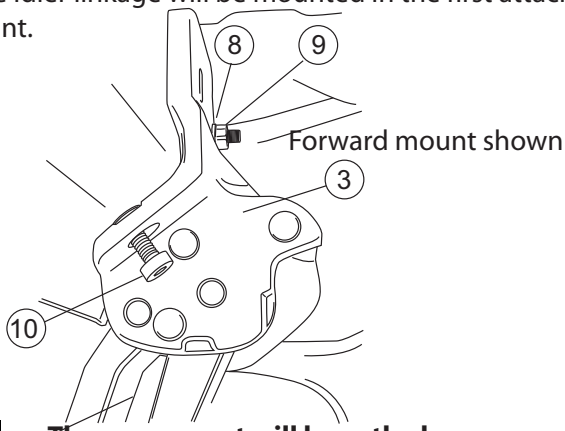

The rear mount will have the large upper shaft for the motor.

1

Tighten bolts. Attach rear Motor linkage assembly (with large upper pivot shaft) with the same procedure.

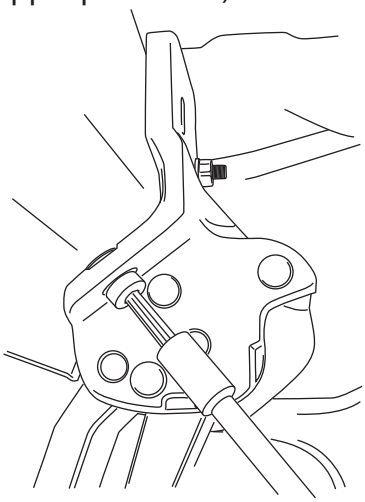

2

After both linkage assemblies are securely mounted, attach step extrusion to lower linkage by aligning t-nuts with slots.

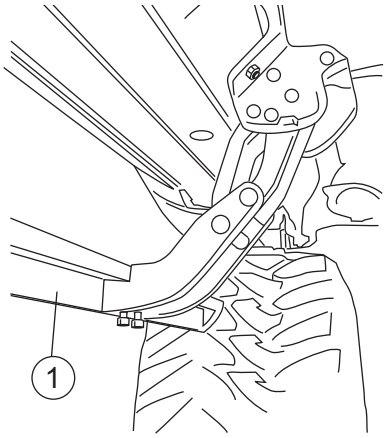

3

Adjust step extrusion so that the overhang off the rear linkage is about 11.5 inches.

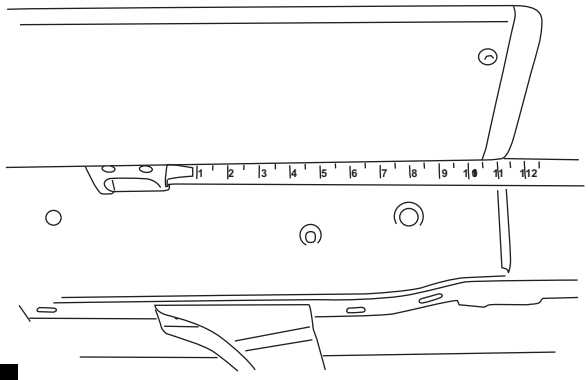

4

Tighten 4 screws with 3/16" allen wrench.

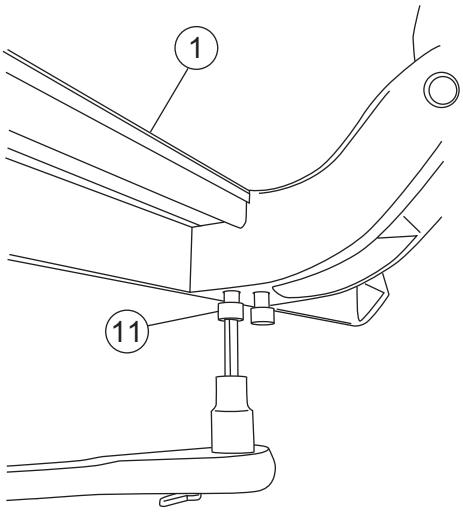

5

Mount controller just rearward of air-intake box using two 11" wire ties. Attach to factory conduit running between airbox and master cylinder.

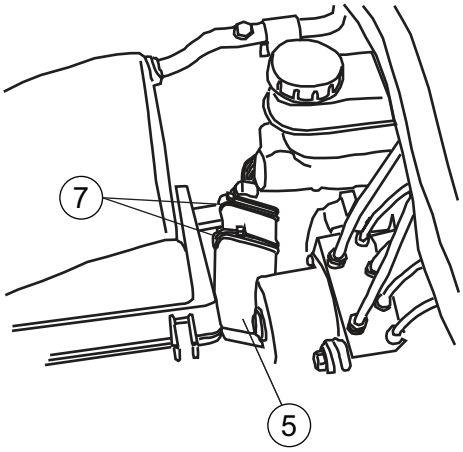

6

Connect Power Step wire harness to the controller. Make sure that the locking tabs engage on the connector.

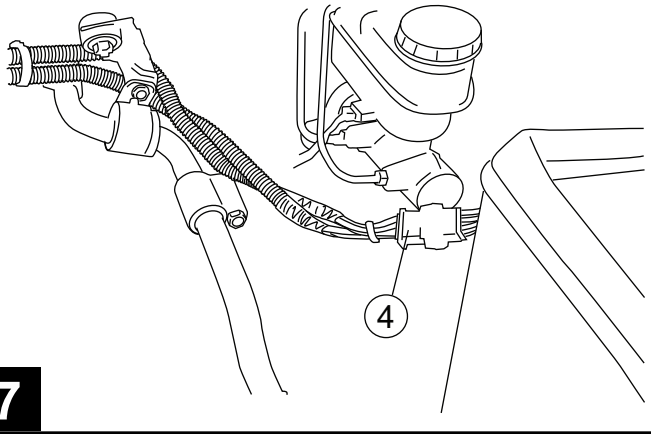

7

Route long end of harness and red and black power lines across to the other side. Secure with wire wraps along the fire wall.

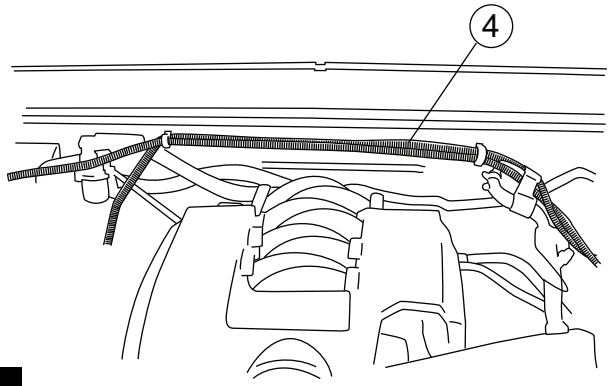

8

Remove fuse. Attach eyelet of red wire to positive terminal. Attach eyelet of black wire to negative terminal of battery.

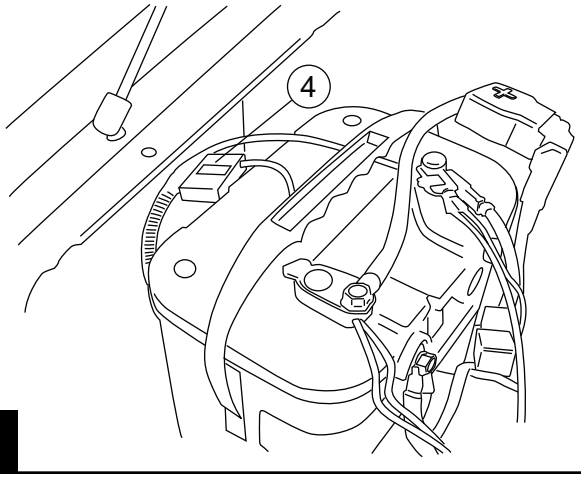

9

Long end to passenger side and short end to driver side, route harness under vehicle toward motors. Run trigger wires through floor board grommet behind front linkage assemblies.

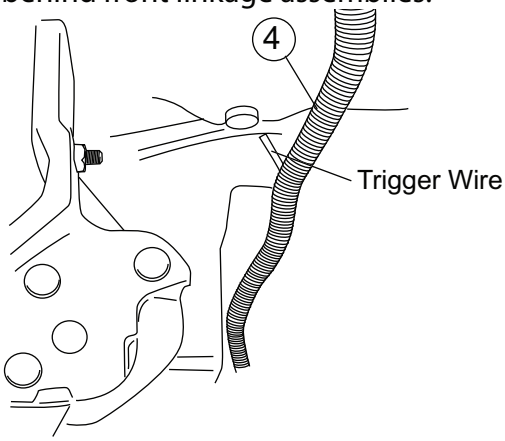

10

Route harness back to rear linkages. Secure with wire wraps.

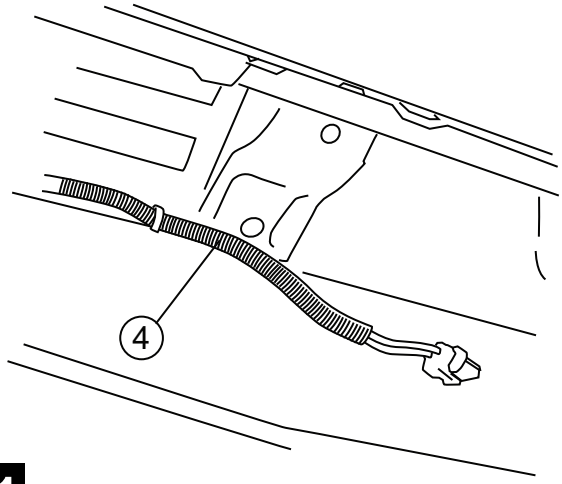

11

Insert plug from wire harness onto motor.

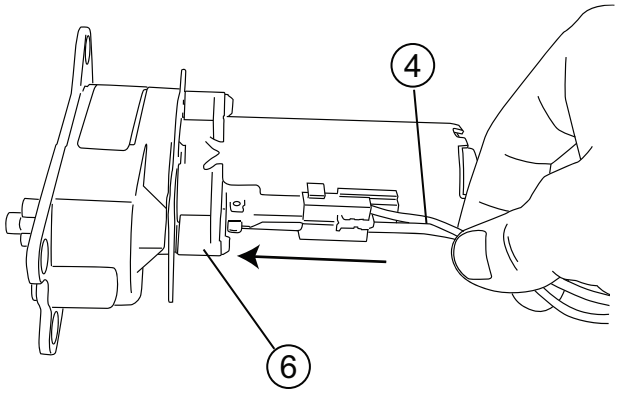

12

Slide rubber grommet on wire harness into slot of motor cover. Insert motor cover onto motor.

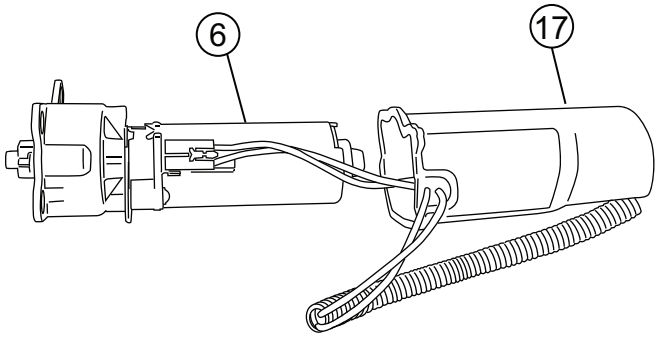

13

Insert plastic push pin rivets in mounting holes of motor cover.

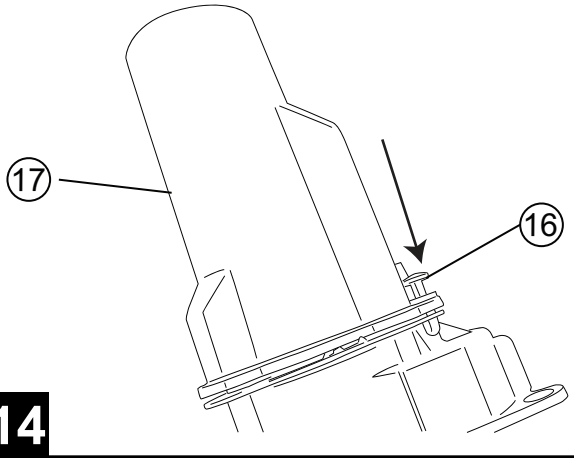

14

Install motor mounting bracket using the three M6x12 bolts. Then mount motor using the two M6x16 countersink bolts. Use thread locking compound.

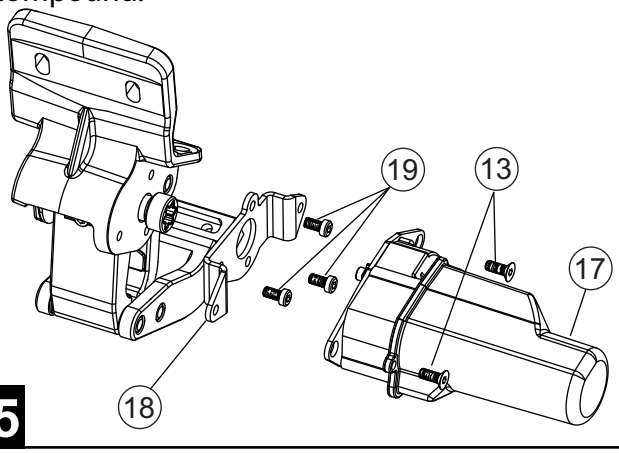

15

After removing sill plate from front door of vehicle, lift carpet and pull trigger wires though grommet. Remove kick panel and locate the appropriate signal wires (will match trigger wires).

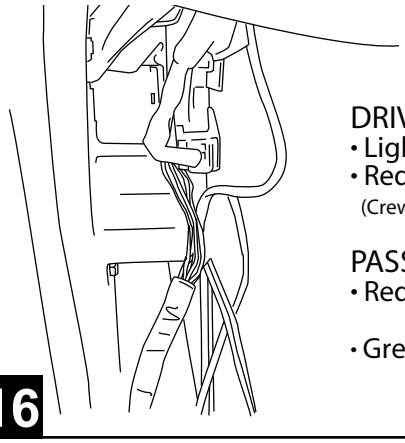

DRIVER SIDE:
- Light Blue
- Red w/ yellow stripe (Crew Cab and ArmadaOnly)

PASSENGER SIDE:
- Red with Blue Stripe & Silver Dashes
- Grey (Crew Cab and Armada Only)

16

Using supplied Posi-Tap™ connector, splice Power Step trigger wires into the corresponding signal wires located in step 16.

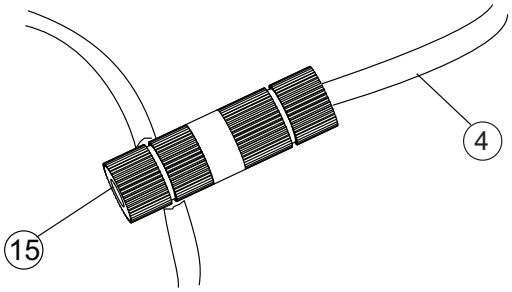

17

Reinstall fuse. Check that all doors activate the Power Step and the LED Lights work when doors open and close. Reinstall any remaining trim panels.

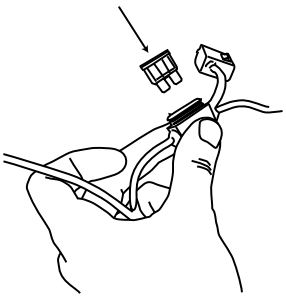

18

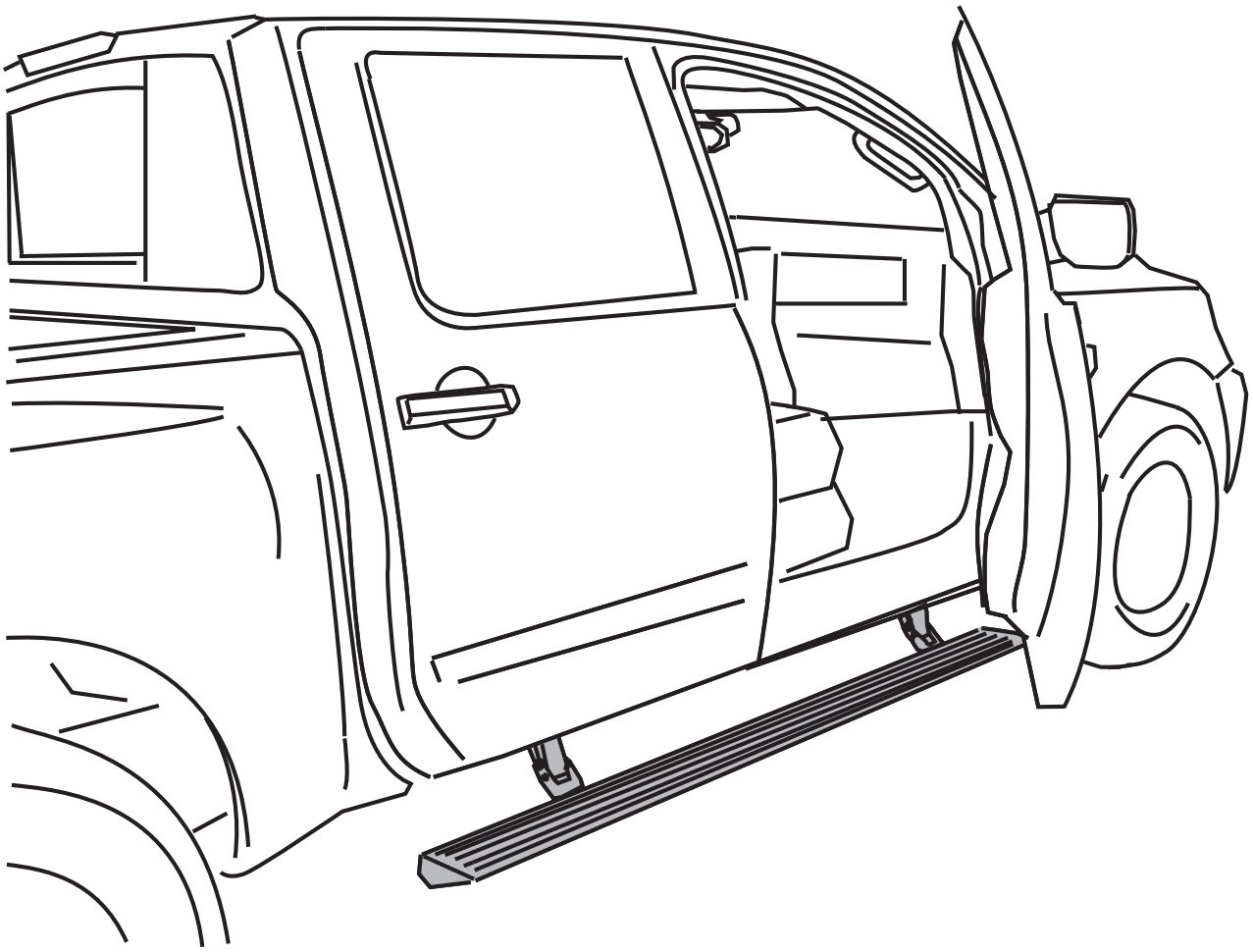

FINAL SYSTEM CHECK

Check that all doors activate the PowerStep and the LED lights work when doors open and close.

NORMAL OPERATION: When the doors open, PowerStep automatically deploys from under the vehicle. When the doors are closed, PowerStep will automatically return to the stowed/retracted position. ***Note that there is a 2-second delay before the PowerStep returns to the stowed/retracted position.***

CORRECT OPERATION OF LIGHTS: All four lamps will illuminate upon opening any door of vehicle. Lamps will stay on until restowing of both Power Steps or until 5 minutes has expired with the doors open. When the lights timeout after 5 minutes, they can be reillumintated by closing and opening any door of vehicle.

AMP RESEARCH PowerStep™

Congratulations on your purchase of the genuine AMP Research PowerStep! Here's what you should know...

POWER-DEPLOYABLE RUNNING BOARDS OPERATION: AMP Research PowerStep running boards automatically move when the doors are opened to assist entering and exiting the vehicle.

Automatic power deploy:
The running boards will extend down and out when the doors are opened.

Automatic power stow:
The running boards will return to the stowed position when the doors are closed. There will be a 2-second delay before the running boards move to the stowed position.

Automatic stop:
If an object is in the way of the moving running board, the running board will automatically stop. To reset, clear any obstruction, then simply open and close the door to resume normal operation.

Manually set in the deployed (OUT) position for access to the roof:
The running boards can be manually set in the deployed position by firmly holding the step down with your foot while at the same time closing the door. To resume normal operation, open and close the door.

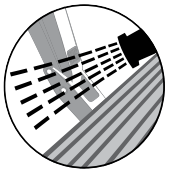

Maintenance: In adverse conditions, debris such as mud, dirt, and salt may become trapped in the running board mechanism, possibly leading to unwanted noise. If this occurs, manually set the running boards to the deployed position and flush the front and rear hinge arms with a high-pressure car wash wand. Avoid spraying the motors directly. After washing, apply silicone spray lubricant to the hinge pivot pins. Do not apply silicone, wax or protectants like Armor All® to the running board stepping surface.

Caution! Keep hands away when the running board is in motion.

5-YEAR LIMITED WARRANTY

AMP RESEARCH warrants this product to be free from defects in material and workmanship for FIVE (5) YEARS FROM DATE OF PURCHASE, provided there has been normal use and proper maintenance. This warranty applies to the original purchaser only. All remedies under this warranty are limited to the repair replacement of the product itself, or the repair or replacement of any component part thereof, found by the factory to be defective within the time period specified. The decision to repair or replace is wholly within the discretion of the manufacturer.

This warranty specifically excludes labor. If you have a warranty claim, first you must call our factory at the number below for instructions. You must retain proof of purchase and submit a copy with any items returned for warranty work. Upon completion of warranty work, if any, we will return the repaired or replaced item or items to you freight prepaid. Damage to our products caused by accidents, fire, vandalism, negligence, misinstallation, misuse, Acts of God, or by defective parts not manufactured by us, is not covered under this warranty.

ANY IMPLIED WARRANTIES OF MERCHANTABILITY AND/OR FITNESS FOR A PARTICULAR PURPOSE CREATED HEREBY ARE LIMITED IN DURATION TO THE SAME DURATION AND SCOPE AS THE EXPRESS WRITTEN WARRANTY. OUR COMPANY SHALL NOT BE LIABLE FOR ANY INCIDENTAL OR CONSEQUENTIAL DAMAGE.

Some states do not allow limitations on how long an implied warranty lasts, or the exclusion or limitation of incidental or consequential damages, so the above limitations or exclusions may not apply to you. This warranty gives you specific legal rights, and you may also have other rights that vary from state to state.

FOR WARRANTY ISSUES WITH THIS PRODUCT PLEASE CALL AMP RESEARCH CUSTOMER SERVICE 1-800-315-9697

WARNING

Be sure to read and precisely follow the provided instructions when installing this product. Failure to do so could place the vehicle occupants in a potentially dangerous situation. After installing or reinstalling, re-check to insure that the product is properly installed.